WAGO I/O SYSTEM 750

Fieldbus Independent I/O Modules

2 AI DC 0-10 V, Single-Ended 750-467

Manual

Version 1.0.2

WAGO®
INNOVATIVE CONNECTIONS

Copyright © 2006 by WAGO Kontakttechnik GmbH & Co. KG
All rights reserved.

WAGO Kontakttechnik GmbH & Co. KG
Hansastraße 27
D-32423 Minden

Phone: +49 (0) 571/8 87 – 0
Fax: +49 (0) 571/8 87 – 1 69

E-Mail: info@wago.com

Web: http://www.wago.com

Technical Support
Phone: +49 (0) 571/8 87 – 5 55
Fax: +49 (0) 571/8 87 – 85 55

E-Mail: support@wago.com

Every conceivable measure has been taken to ensure the correctness and completeness of this documentation. However, as errors can never be fully excluded, we would appreciate any information or ideas at any time.

E-Mail: documentation@wago.com

We wish to point out that the software and hardware terms as well as the trademarks of companies used and/or mentioned in the present manual are generally trademark or patent protected.

Content

1 Important Comments 4
1.1 Legal Principles 4
1.1.1 Copyright 4
1.1.2 Personnel Qualification 4
1.1.3 Intended Use 4
1.2 Symbols 5
1.3 Number Notation 5
1.4 Safety Notes 6
1.5 Scope 6

2 I/O Modules 7
2.1 Analog Input Modules 7
2.1.1 750-467 [2 AI DC 0-10 V, Single-Ended] 7
2.1.1.1 View 7
2.1.1.2 Variations 7
2.1.1.3 Description 8
2.1.1.4 Display Elements 9
2.1.1.5 Schematic Diagram 9
2.1.1.6 Technical Data 10
2.1.1.7 Process Image 11
2.1.1.7.1 Standard Data Format 12
2.1.1.7.2 Special Data Format 12

1 Important Comments

To ensure fast installation and start-up of the units described in this manual, we strongly recommend that the following information and explanations are carefully read and abided by.

1.1 Legal Principles

1.1.1 Copyright

This manual is copyrighted, together with all figures and illustrations contained therein. Any use of this manual which infringes the copyright provisions stipulated herein, is not permitted. Reproduction, translation and electronic and photo-technical archiving and amendments require the written consent of WAGO Kontakttechnik GmbH & Co. KG. Non-observance will entail the right of claims for damages.

WAGO Kontakttechnik GmbH & Co. KG reserves the right to perform modifications allowed by technical progress. In case of grant of a patent or legal protection of utility patents all rights are reserved by WAGO Kontakttechnik GmbH & Co. KG. Products of other manufacturers are always named without referring to patent rights. The existence of such rights can therefore not be ruled out.

1.1.2 Personnel Qualification

The use of the product detailed in this manual is exclusively geared to specialists having qualifications in PLC programming, electrical specialists or persons instructed by electrical specialists who are also familiar with the valid standards. WAGO Kontakttechnik GmbH & Co. KG declines all liability resulting from improper action and damage to WAGO products and third party products due to non-observance of the information contained in this manual.

1.1.3 Intended Use

For each individual application, the components supplied are to work with a dedicated hardware and software configuration. Modifications are only permitted within the framework of the possibilities documented in the manuals. All other changes to the hardware and/or software and the non-conforming use of the components entail the exclusion of liability on part of WAGO Kontakttechnik GmbH & Co. KG.

Please direct any requirements pertaining to a modified and/or new hardware or software configuration directly to WAGO Kontakttechnik GmbH & Co. KG.

1.2 Symbols

Danger
Always abide by this information to protect persons from injury.

Warning
Always abide by this information to prevent damage to the device.

Attention
Marginal conditions must always be observed to ensure smooth operation.

ESD (Electrostatic Discharge)
Warning of damage to the components by electrostatic discharge. Observe the precautionary measure for handling components at risk.

Note
Routines or advice for efficient use of the device and software optimization.

More information
References on additional literature, manuals, data sheets and INTERNET pages

1.3 Number Notation

Number Code	Example	Note
Decimal	100	normal notation
Hexadecimal	0x64	C notation
Binary	'100' '0110.0100'	Within ', Nibble separated with dots

1.4 Safety Notes

Warning
Switch off the system prior to working on bus modules!

In the event of deformed contacts, the module in question is to be replaced, as its functionality can no longer be ensured on a long-term basis.

The components are not resistant against materials having seeping and insulating properties. Belonging to this group of materials is: e.g. aerosols, silicones, triglycerides (found in some hand creams).

If it cannot be ruled out that these materials appear in the component environment, then additional measures are to be taken:
- installation of the components into an appropriate enclosure
- handling of the components only with clean tools and materials.

Attention
Cleaning of soiled contacts may only be done with ethyl alcohol and leather cloths. Thereby, the ESD information is to be regarded.

Do not use any contact spray. The spray may impair the functioning of the contact area.

The WAGO-I/O-SYSTEM 750 and its components are an open system. It must only be assembled in housings, cabinets or in electrical operation rooms. Access must only be given via a key or tool to authorized qualified personnel.

The relevant valid and applicable standards and guidelines concerning the installation of switch boxes are to be observed.

ESD (Electrostatic Discharge)
The modules are equipped with electronic components that may be destroyed by electrostatic discharge. When handling the modules, ensure that the environment (persons, workplace and packing) is well grounded. Avoid touching conductive components, e.g. gold contacts.

1.5 Scope

This manual describes the Analog Input Module 750-467
2 AI DC 0-10 V, Single-Ended of the modular WAGO-I/O-SYSTEM 750.

Handling, assembly and start-up are described in the manual of the Fieldbus Coupler. Therefore this documentation is valid only in the connection with the appropriate manual.

2 I/O Modules

2.1 Analog Input Modules

2.1.1 750-467 [2 AI DC 0-10 V, Single-Ended]

2-Channel Analog Input Module (0-10V, Single-Ended)

2.1.1.1 View

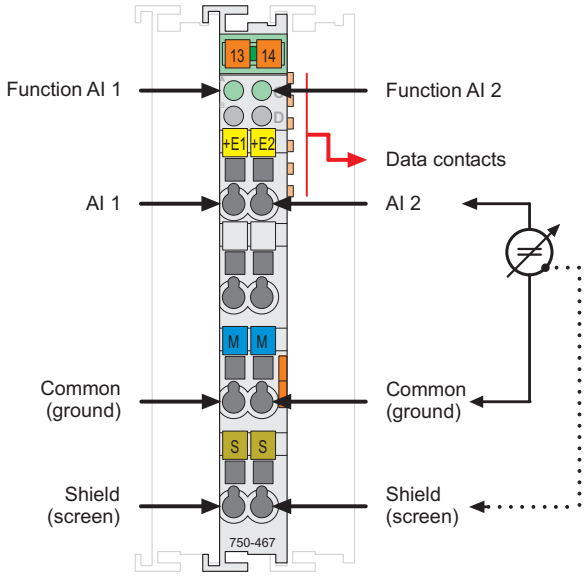

Fig. 2.1.1-1: 2-Channel Analog Input Module 750-467 g046700e

2.1.1.2 Variations

Item-No.	Designation	Description
750-467	2 AI (0-10V) Single-Ended	2-Channel Analog Input Module, 0-10V, Single-Ended
750-467/000-200	2 AI (0-10V) Single-Ended, with Siemens (S5-FB 250)	2-Channel Analog Input Module, 0-10V, Single-Ended, adapted data format for S5-control systems with the use of function block FB 250

2.1.1.3 Description

The analog input module and its variations receives signals with the standardized values of 0-10 V.

The module has two input channels. The fieldside signals may be received via the connections AI 1 and Common (ground) or AI 2 and Common (ground). The input channels of a module have a common ground and a shield (screen) connection (S). The Shield (screen) is directly connected to the DIN rail. A capacitive connection is made automatically when snapped onto the DIN rail.

The input signal of each channel is electrically isolated and will be transmitted with a resolution of 12 bits.

The operational readiness and trouble-free internal data bus communication of the channels are indicated via a green Function LED.

Any configuration of the input modules is possible when designing the fieldbus node. Grouping of module types is not necessary.

The voltage supply is done via system voltage.

Attention
This module has no power contacts. For field supply to downstream I/O modules, a supply module will be needed.

The analog input module 750-467 and its variations can be used with all couplers/controllers of the WAGO-I/O-SYSTEM 750 (except for the economy types 750-320, -323, -324 and -327).

2.1.1.4 Display Elements

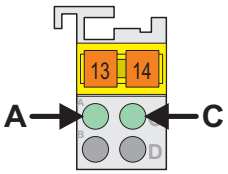

Fig. 2.1.1-2: Display Elements g040002x

LED	Channel	Meaning	State	Function
A green	1	Function AI 1	off	No operational readiness or the internal data bus communication is interrupted
			on	Operational readiness and trouble-free internal data bus communication
C green	2	Function AI 2	off	No operational readiness or the internal data bus communication is interrupted
			on	Operational readiness and trouble-free internal data bus communication

2.1.1.5 Schematic Diagram

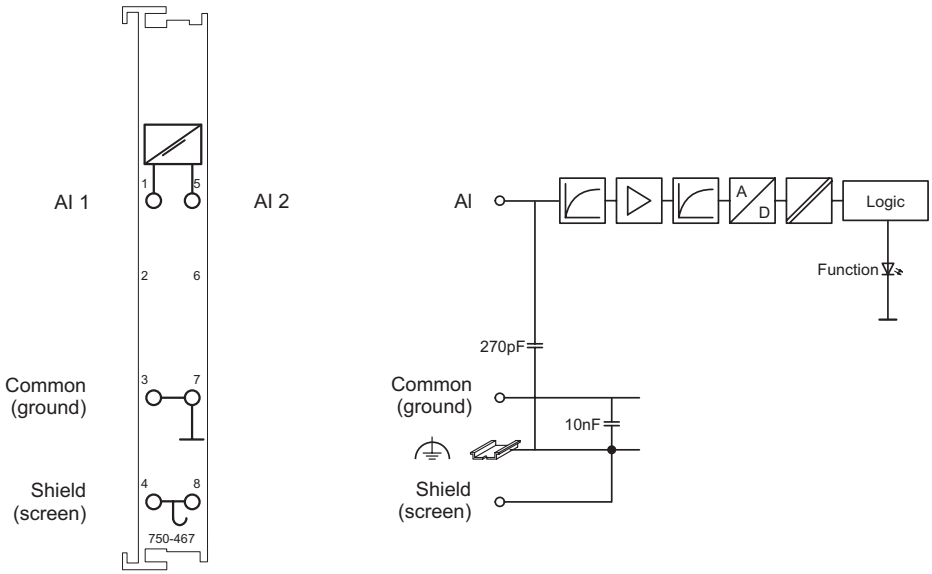

Fig. 2.1.1-3: 2-Channel Analog Input Module 750-467 g046701e

2.1.1.6 Technical Data

Module Specific Data		
Number of inputs	2	
Voltage supply	via system voltage DC /DC	
Current consumption $_{typ.}$ (internal)	60 mA	
Input current $_{max.}$	35 V	
Signal current	0 V... 10 V	
Input resistance $_{typ.}$	130 kΩ	
Resolution	12 Bit	
Conversion time $_{typ.}$	2 ms	
Measuring error $_{25°C}$	<± 0.2 % of full scale value	
Temperature coefficient	<± 0.01 % /K of full scale value	
Isolation	500 V (Field / System)	
Bit width	2 x 16 bits data 2 x 8 bits control/status (option)	
Dimensions (mm) W x H x L	12 x 64* x 100 * from upper edge of 35 DIN rail	
Weight	ca. 55 g	
Standards and Regulations (cf. Chapter 2.2 of the Coupler/Controller Manual)		
EMC-Immunity to interference (CE)	acc. to EN 50082-2 (96)	
EMC-Emission of interference (CE)	acc. to EN 50081-1 (93)	
Approvals (cf. Chapter 2.2 of the Coupler/Controller Manual)		
	$_{C}UL_{US}$ (UL508)	
	$_{C}UL_{US}$ (UL1604)	Class I Div2 ABCD T4A
	KEMA	II 3 G EEx nA II T4
	Conformity Marking	

More Information
Detailed references to the approvals are listed in the document "Overview Approvals WAGO-I/O-SYSTEM 750", which you can find on the CD ROM ELECTRONICC Tools and Docs (Item-No.: 0888-0412)
or in the internet under:
www.wago.com → Documentation → WAGO-I/O-SYSTEM 750 → System Description

2.1.1.7 Process Image

The analog input module 750-467 and its variations transmit 16-bit measured values and 8 status bits per channel.

The digitalized measured value is transmitted in a data word (16 bits) as input byte 0 (low) and input byte 1 (high) into the process image of the coupler / controller.
This value is represented with a 12 bit resolution on bit B3 ... B14.
From the manufacturing number |32|02|XX|XX| onwards, the status information included in the three least significant bits (B0 ... B2) can be parsed in the event of an error. Bit B0 = 1 is set when the range of measurement is overranged.
For modules having a previous manufacturing number, the last 3 bits are not parsed.
The manufacturing number is part of the lateral marking on the module enclosure.

Some fieldbus systems can process input channel status information by means of a status byte.
This status byte can be displayed via the starting tool WAGO-I/O-CHECK 2.
However, processing via the coupler / controller is optional, which means that accessing or parsing the status information depends on the fieldbus system.

Attention
The representation of the process data of some I/O modules or their variations in the process image depends on the fieldbus coupler/-controller used. Please take this information as well as the particular design of the respective control/status bytes from the section "Fieldbus Specific Design of the Process Data" included in the description concerning the process image of the corresponding coupler/controller.

2.1.1.7.1 Standard Data Format

For the standard module 750-467, the voltage ranging from 0 V to 10 V is scaled on the numerical values ranging from 0x0000 to 0x7FF9.

Process values of module 750-467					
Input voltage	Numerical value				Status-byte
	binary		hex.	dec.	
0 V - 10 V	Measured value	*) X F Ü			hex.
<0.00	'0000.0000.0000.0	000'	0x0000	0	0x00
0.00	'0000.0000.0000.0	000'	0x0000	0	0x00
1.25	'0001.0000.0000.0	000'	0x1000	4096	0x00
2.50	'0010.0000.0000.0	000'	0x2000	8192	0x00
3.75	'0011.0000.0000.0	000'	0x3000	12288	0x00
5.00	'0100.0000.0000.0	000'	0x4000	16384	0x00
6.25	'0101.0000.0000.0	000'	0x5000	20480	0x00
7.50	'0110.0000.0000.0	000'	0x6000	24576	0x00
8.75	'0111.0000.0000.0	000'	0x7000	28672	0x00
10.00	'0111.1111.1111.1	000'	0x7FF8	32760	0x00
>10.00	'0111.1111.1111.1	001'	0x7FF9	32761	0x42

*) status bits: X = not used, F = short-circuit, Ü = oversize

2.1.1.7.2 Special Data Format

To digitalize the measurement value, the variation 750-467/000-200 uses a format adapted for the S5 control systems using FB 250.

For this variation, the input voltage ranging from 0 V to 10 V is scaled on the numerical values ranging from 0x1000 to 0x5001.

Process values of module 750-467/000-200					
Input voltage	Numerical value				Status-byte
	binary		hex.	dec.	
0 V - 10 V	Measured value	*) X F Ü			hex.
<0.00	'0001.0000.0000.0	000'	0x1000	4096	0x00
0.00	'0001.0000.0000.0	000'	0x1000	4096	0x00
1.25	'0001.1000.0000.0	000'	0x1800	6144	0x00
2.50	'0010.0000.0000.0	000'	0x2000	8192	0x00
3.75	'0010.0100.0000.0	000'	0x2800	10240	0x00
5.00	'0011.0000.0000.0	000'	0x3000	12288	0x00
6.25	'0011.1000.0000.0	000'	0x3800	14336	0x00
7.50	'0100.0000.0000.0	000'	0x4000	16384	0x00
8.75	'0100.1000.0000.0	000'	0x4800	18432	0x00
10.00	'0101.0000.0000.0	000'	0x5000	20480	0x00
>10.00	'0101.0000.0000.0	001'	0x5001	20481	0x42

*) status bits: X = not used, F = short-circuit, Ü = oversize

WAGO Kontakttechnik GmbH & Co. KG
Postfach 2880 • D-32385 Minden
Hansastraße 27 • D-32423 Minden
Phone: 05 71/8 87 – 0
Fax: 05 71/8 87 – 1 69
E-Mail: info@wago.com

Internet: http://www.wago.com