ELECTRICAL INTERCONNECTIONS

POWER CAGE CLAMP®

The complete **high-current product range**

DIN rail mount terminal blocks from 8 AWG to 4/0

WAGO®
INNOVATIVE CONNECTIONS

Up to 4/0 with Just One Turn

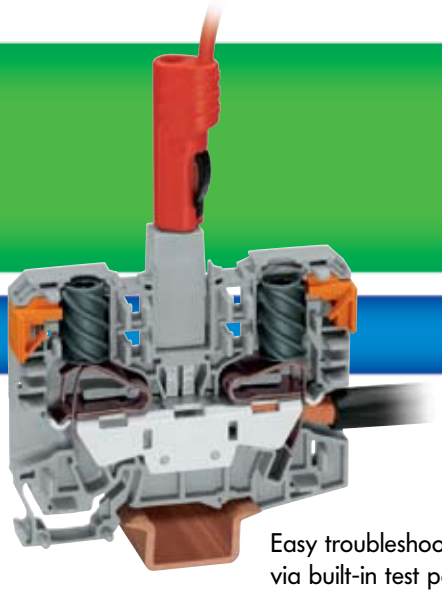

Easy troubleshooting via built-in test point and test adapter accessory.

Jumpers - two jumper slots per terminal

Jumper adjacent terminals with a simple push-in jumper.

Slide the marker strip out to remove the jumper.

Power Tap

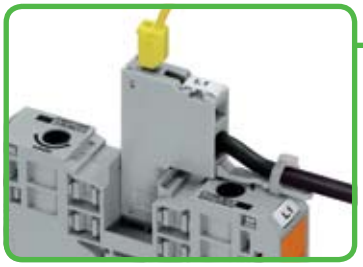

The Power Tap terminal provides a space saving and easy to install terminal for power distribution to additional loads. Installed in the jumper slot (can be installed with jumper) the Power Tap offers a marking tag holder, built-in test point, as well as a strain relief accessory.

Marking

In addition to the WSB marking tag system, maker strips can also be used.

Conductor termination 2 AWG

Insert screwdriver and turn counterclockwise. Then push in orange locking tab for hands free wiring.

Insert the prepared conductor until it hits the backstop. Hold this position. . .

. . . Unlock the locking tab with a short counterclockwise turn of the screwdriver[1], when unlocked, allow screwdriver to rotate clockwise (automatic)[2] to securely terminate the conductor.

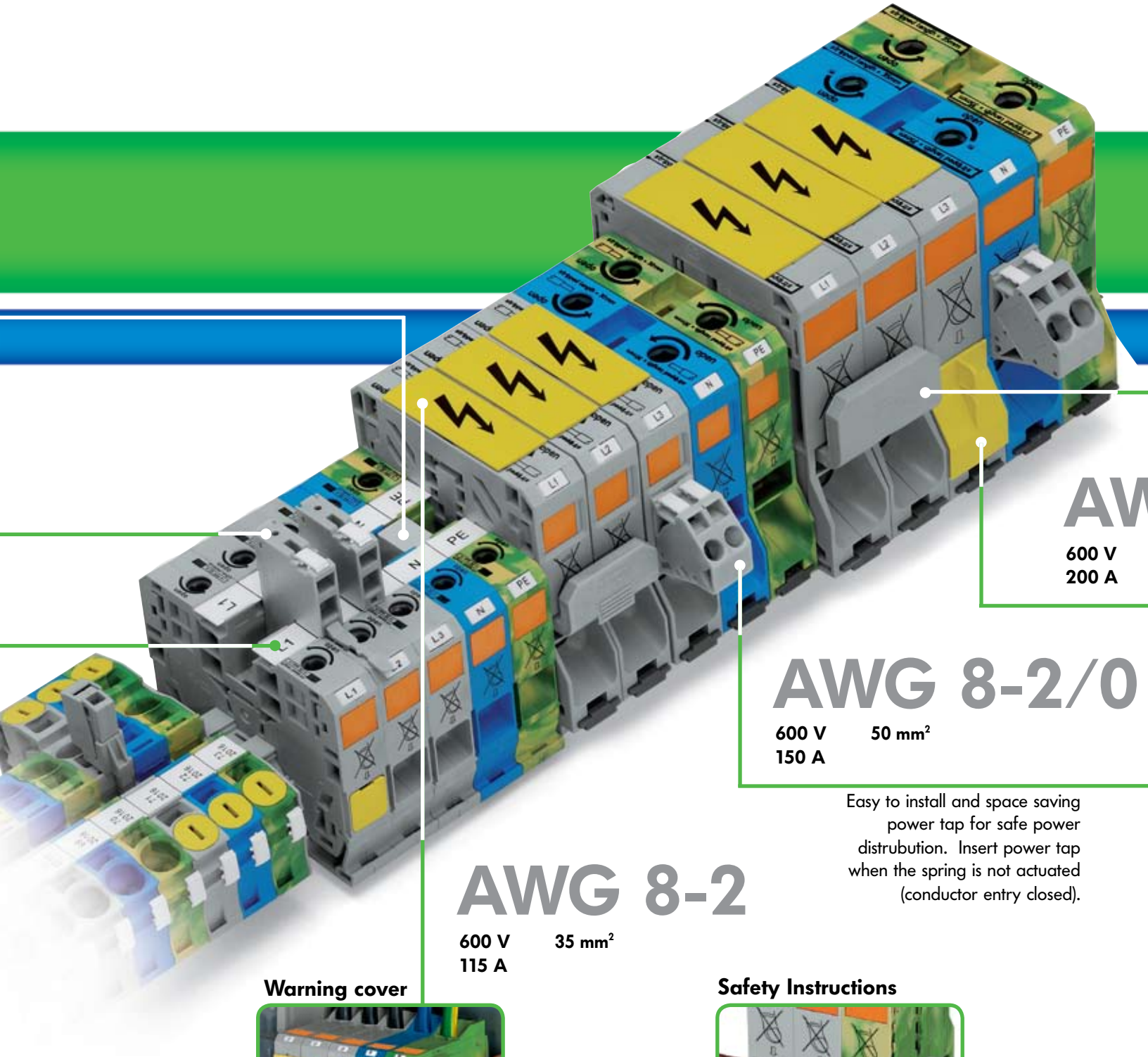

Easy to install and space saving power tap for safe power distrubution. Insert power tap when the spring is not actuated (conductor entry closed).

Warning cover

Provide visual indication for high voltage applications.

Safety Instructions

Do not insert fingers in the conductor entry! Risk of injury.

Jumpers

Side-entry, comb style jumper allows for fast, safe, and easy potential commoning. Simply insert jumper into slot above the conductor entry - when the spring is not actuated (conductor entry closed). For use with max. rated conductor.

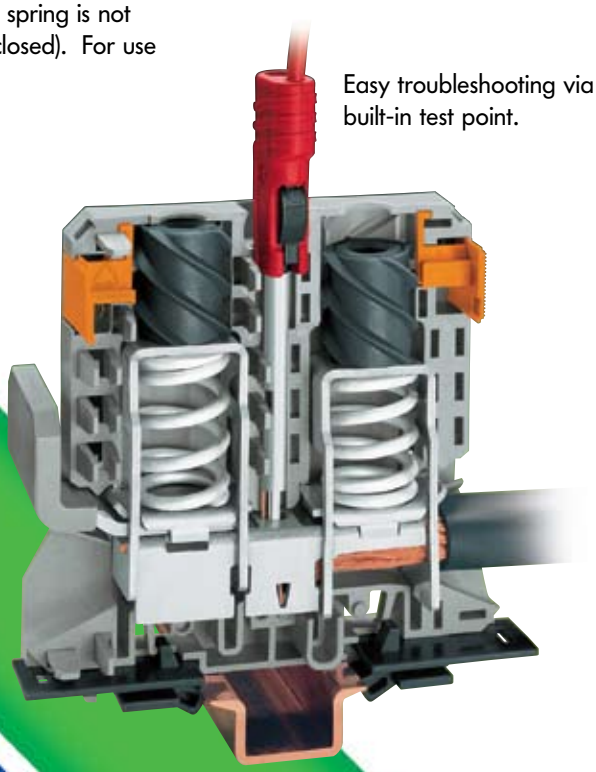

Easy troubleshooting via built-in test point.

VG 4-4/0

95 mm²

Shock protector

To protect unused conductor entries (separate jumper entry protector from shock protector unit for used entries).

Power Tap

Conductor termination 2/0 to 4/0

Insert Allen wrench and rotate counterclockwise. Then push in orange locking tab for hands free wiring.

Insert the prepared conductor until it hits the backstop. Hold this position. . .

. . . unlock the locking tab with a short counterclockwise turn of the Allen wrench[1]. When unlocked (click), allow Allen wrench to rotate clockwise (automatic)[2] to securely terminate the connector.

2 AWG

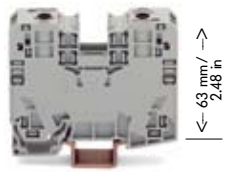

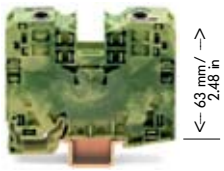

	2-conductor feed-through terminal		2-conductor ground terminal		Power Tap	
Order No.	gray **285-135**	blue **285-134**	green-yellow	**285-137**	gray	**285-427**
Nominal cross section	6–35 mm²	AWG 8–2	6–35 mm²	AWG 8–2	0.2 – 6 mm²	AWG 24–10
Nominal voltage	1000 V / 8 kV / 3	600 V			800 V / 8 kV / 3	
Nominal current	115 A				32 A	
Stripped Length	25 mm	0.98 in	25 mm	0.98 in	12-13 mm	0.49 in
Jumper	gray	**285-435**	gray	**285-435**	Strain relief plate	**769-410**
Screwdriver		**210-621**		**210-621**	Test plug 2 mm Ø	**210-136**
Warning cover	yellow	**285-420**	yellow	**285-420**	Test plug 2.3 mm Ø	**210-137**
Finger protection cover	yellow	**285-421**	yellow	**285-421**		
Test adapter		**283-404**		**283-404**		

2/0

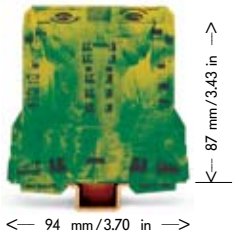

	2-conductor feed-through terminal		2-conductor ground terminal		Power Tap	
Order No.	gray **285-150**	blue **285-154**	green-yellow	**285-157**	gray	**285-447**
Nominal cross section	10–50 (70 "f") mm²	AWG 8–2 / 0	10–50 (70 "f") mm	AWG 8–2 / 0	2 x 0.2 – 6 mm²	AWG 24–10
Nominal voltage	1000 V / 8 kV / 3	600 V			1000 V / 8 kV / 3	
Nominal current	150 A				41 A	
Stripped Length	30 mm	1.18 in	30 mm	1.18 in	12-13 mm	0.49 in
Jumper	gray	**285-450**	gray	**285-450**		
Allen wrench		**285-172**		**285-172**		
Warning cover	yellow	**285-440**	yellow	**285-440**		
Finger protection cover	yellow	**285-441**	yellow	**285-441**		

4/0

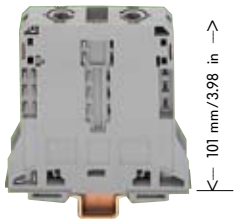

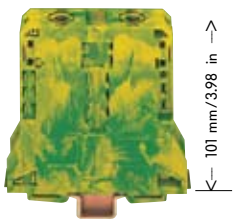

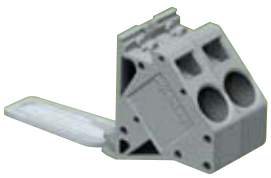

	2-conductor feed-through terminal		2-conductor ground terminal		Power Tap	
Order No.	gray **285-195**	blue **285-194**	green-yellow	**285-197**	gray	**285-407**
Nominal cross section	25–95 mm²	AWG 4–4 / 0	25–95 mm²	AWG 4–4 / 0	2x 0.2 – 10/16 mm²	AWG 24–6
Nominal voltage	1000 V / 8 kV / 3	600 V			1000 V / 8 kV / 3	
Nominal current	200 A				57 A	
Stripped Length	35 mm	1.38 in	35 mm	1.38 in	16-17 mm	0.65 in
Jumper	gray	**285-495**	gray	**285-495**		
Allen wrench		**285-172**		**285-172**		
Warning cover	yellow	**285-170**	yellow	**285-170**		
Finger protection cover	yellow	**285-169**	yellow	**285-169**		

WAGO Service Worldwide

Germany
WAGO Kontakttechnik
Minden
Tel. ++0571/887-443
Fax ++0571/887-541

Austria
WAGO Kontakttechnik
GmbH Vienna
Tel. ++43/1/615 07 80
Fax ++43/1/615 07 75

Belgium
WAGO Kontakttechnik
Zaventem
Tel. ++32/2/7 17 90 90
Fax ++32/2/7 17 90 99

China
WAGO ELECTRONIC Co. Ltd.
Tianjin
Tel.
++86/22/82125854/64/74
Fax ++86/22/82125984

England
WAGO, Ltd.
Rugby
Tel. ++44/1788/568008
Fax ++44/1788/568050

France
WAGO CONTACT SA.
Paris
Tel. ++33/148172590
Fax ++33/148632520

Italy
WAGO ELETTRONICA SRL
San Lazzaro di Savena (BO)
Tel. ++39/051/625-91-25
Fax ++39/051/625-91-27

Japan
WAGO Co. of JAPAN Ltd.
Tokyo
Tel. ++81/3/3254/8881
Fax ++81/3/3254/8885

Poland
WAGO ELWAG sp. z o. o.
Wroclaw
Tel. ++48/71/33-66-626
Fax ++48/71/33-60-952

Singapore
WAGO Electronic Pte. Ltd.
Singapur
Tel. ++65/2866776
Fax ++65/2842425

Switzerland
WAGO CONTACT SA
Domdidier
Tel. ++65/2866776
Fax ++65/2842425

Mexico
WAGO Corporation
Tel. 001-800-309-5975
+ 52-(55)-26-44-69-16
Fax + 52-(55)-26-44-69-15

Canada
WAGO Corporation
Tel. 800 / DIN Rail (346-7245)
Fax 262 / 255-3232

51017264 0888-0832/0000-0137 Printed in the United States

WAGO Corporation
N120 W19129 Freistadt Road
Germantown, Wisconsin 53022
Telephone: 800 / DIN Rail (346-7245)
Fax: 262 / 255-3232
info.us@wago.com
www.wago.us

INNOVATIVE CONNECTIONS