WAGO I/O SYSTEM 750

Fieldbus Independent I/O Modules

8 DO DC 24 V 0.5 A, 750-536

Manual

Version 1.0.0

WAGO®
INNOVATIVE CONNECTIONS

Copyright © 2005 by WAGO Kontakttechnik GmbH & Co. KG
All rights reserved.

WAGO Kontakttechnik GmbH & Co. KG
Hansastraße 27
D-32423 Minden

Phone: +49 (0) 571/8 87 – 0
Fax: +49 (0) 571/8 87 – 1 69

E-Mail: info@wago.com

Web: http://www.wago.com

Technical Support
Phone: +49 (0) 571/8 87 – 5 55
Fax: +49 (0) 571/8 87 – 85 55

E-Mail: support@wago.com

Every conceivable measure has been taken to ensure the correctness and completeness of this documentation. However, as errors can never be fully excluded, we would appreciate any information or ideas at any time.

E-Mail: documentation@wago.com

We wish to point out that the software and hardware terms as well as the trademarks of companies used and/or mentioned in the present manual are generally trademark or patent protected.

Content

1 Important Comments 4
1.1 Legal Principles 4
1.1.1 Copyright 4
1.1.2 Personnel Qualification 4
1.1.3 Intended Use 4
1.2 Symbols 5
1.3 Number Notation 5
1.4 Safety Notes 6
1.5 Scope 6

2 I/O Modules 7
2.1 Digital Output Modules 7
2.1.1 750-536 [8 DO DC 24 V 0.5 A, Low-Side Switching] 7
2.1.1.1 View 7
2.1.1.2 Description 7
2.1.1.3 Display Elements 9
2.1.1.4 Schematic Diagram 9
2.1.1.5 Technical Data 10
2.1.1.6 Process Image 10

1 Important Comments

To ensure fast installation and start-up of the units described in this manual, we strongly recommend that the following information and explanations are carefully read and abided by.

1.1 Legal Principles

1.1.1 Copyright

This manual is copyrighted, together with all figures and illustrations contained therein. Any use of this manual which infringes the copyright provisions stipulated herein, is not permitted. Reproduction, translation and electronic and photo-technical archiving and amendments require the written consent of WAGO Kontakttechnik GmbH. Non-observance will entail the right of claims for damages.

WAGO Kontakttechnik GmbH reserves the right to perform modifications allowed by technical progress. In case of grant of a patent or legal protection of utility patents all rights are reserved by WAGO Kontakttechnik GmbH. Products of other manufacturers are always named without referring to patent rights. The existence of such rights can therefore not be ruled out.

1.1.2 Personnel Qualification

The use of the product detailed in this manual is exclusively geared to specialists having qualifications in PLC programming, electrical specialists or persons instructed by electrical specialists who are also familiar with the valid standards. WAGO Kontakttechnik GmbH declines all liability resulting from improper action and damage to WAGO products and third party products due to non-observance of the information contained in this manual.

1.1.3 Intended Use

For each individual application, the components supplied are to work with a dedicated hardware and software configuration. Modifications are only permitted within the framework of the possibilities documented in the manuals. All other changes to the hardware and/or software and the non-conforming use of the components entail the exclusion of liability on part of WAGO Kontakttechnik GmbH.

Please direct any requirements pertaining to a modified and/or new hardware or software configuration directly to WAGO Kontakttechnik GmbH.

1.2 Symbols

Danger
Always abide by this information to protect persons from injury.

Warning
Always abide by this information to prevent damage to the device.

Attention
Marginal conditions must always be observed to ensure smooth operation.

ESD (Electrostatic Discharge)
Warning of damage to the components by electrostatic discharge. Observe the precautionary measure for handling components at risk.

Note
Routines or advice for efficient use of the device and software optimization.

More information
References on additional literature, manuals, data sheets and INTERNET pages

1.3 Number Notation

Number Code	Example	Note
Decimal	100	normal notation
Hexadecimal	0x64	C notation
Binary	'100' '0110.0100'	Within ', Nibble separated with dots

1.4 Safety Notes

Attention
Switch off the system prior to working on bus modules!

In the event of deformed contacts, the module in question is to be replaced, as its functionality can no longer be ensured on a long-term basis.

The components are not resistant against materials having seeping and insulating properties. Belonging to this group of materials is: e.g. aerosols, silicones, triglycerides (found in some hand creams).

If it cannot be ruled out that these materials appear in the component environment, then additional measures are to be taken:
- installation of the components into an appropriate enclosure
- handling of the components only with clean tools and materials.

Attention
Cleaning of soiled contacts may only be done with ethyl alcohol and leather cloths. Thereby, the ESD information is to be regarded.

Do not use any contact spray. The spray may impair the functioning of the contact area.

The WAGO-I/O-SYSTEM 750 and its components are an open system. It must only be assembled in housings, cabinets or in electrical operation rooms. Access must only be given via a key or tool to authorized qualified personnel.

The relevant valid and applicable standards and guidelines concerning the installation of switch boxes are to be observed.

ESD (Electrostatic Discharge)
The modules are equipped with electronic components that may be destroyed by electrostatic discharge. When handling the modules, ensure that the environment (persons, workplace and packing) is well grounded. Avoid touching conductive components, e.g. gold contacts.

1.5 Scope

This manual describes the Digital Output Module 750-536
8 DO DC 24 V 0.5 A, of the modular WAGO-I/O-SYSTEM 750.

Handling, assembly and start-up are described in the manual of the Fieldbus Coupler. Therefore this documentation is valid only in the connection with the appropriate manual.

2 I/O Modules

2.1 Digital Output Modules

2.1.1 750-536 [8 DO DC 24 V 0.5 A, Low-Side Switching]

8 Channel Digital Output Module DC 24 V 0.5 A,
short-circuit-protected, low-side switching

2.1.1.1 View

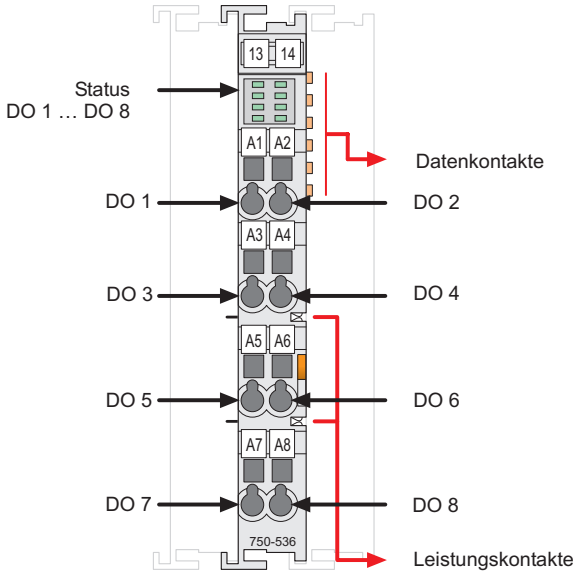

Fig. 2.1.1-1: 8 Channel Digital Output Module 750-536 g053600e

2.1.1.2 Description

The connected load is switched via the digital output from the control system.

The module has eigth output channels and enables the direct wiring of eigth actuators to the connections DO 1 to DO 8.

Note
For the connection of inductive loads a protected circuit, e. g. a recovery diode, has to be switched parallel to this load.

The output channels are electrically short-circuit-protected and low-side switching. Which means that the status of the output channels is "high" if the output channels switch to the 0 V supply voltage for the field side.

The supply voltage for the field side is derived from an adjacent supply module by means of power jumper contacts.

The status of the eight output channels is indicated via green status LEDs (Status DO 1 ... 8).

An optocoupler is used for electrical isolation between the bus and the field side.

Any configuration of the output modules is possible when designing the fieldbus node. Grouping of module types is not necessary.

The field side supply voltage of 24 V for the output module is derived from adjacent I/O modules or from a supply module. The supply voltage for the field side is made automatically through the individual I/O modules by means of power jumper contacts.

Warning
The maximum current of the internal power jumper contacts is 10 A. When configuring the system it is important not to exceed the maximum/sum current. However, if such a case should occur, another supply module must be added.

Attention
In case of overloads a supply module with fuse (750-601) must be connected on the line side to protect the output modules!

The module can be used with all couplers/controllers of the WAGO-I/O-SYSTEM 750.

2.1.1.3 Display Elements

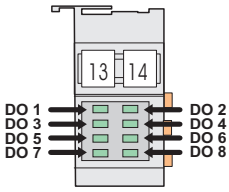

Fig. 2.1.1-2: Display Elements g043002x

LED	Channel	Designation	Status	Function
green	1	Status DO 1	off	Output DO 1: not active
			on	Output DO 1: active
green	2	Status DO 2	off	Output DO 2: not active
			on	Output DO 2: active
green	3	Status DO 3	off	Output DO 3: not active
			on	Output DO 3: active
green	4	Status DO 4	off	Output DO 4: not active
			on	Output DO 4: active
green	5	Status DO 5	off	Output DO 5: not active
			on	Output DO 5: active
green	6	Status DO 6	off	Output DO 6: not active
			on	Output DO 6: active
green	7	Status DO 7	off	Output DO 7: not active
			on	Output DO 7: active
green	8	Status DO 8	off	Output DO 8: not active
			on	Output DO 8: active

2.1.1.4 Schematic Diagram

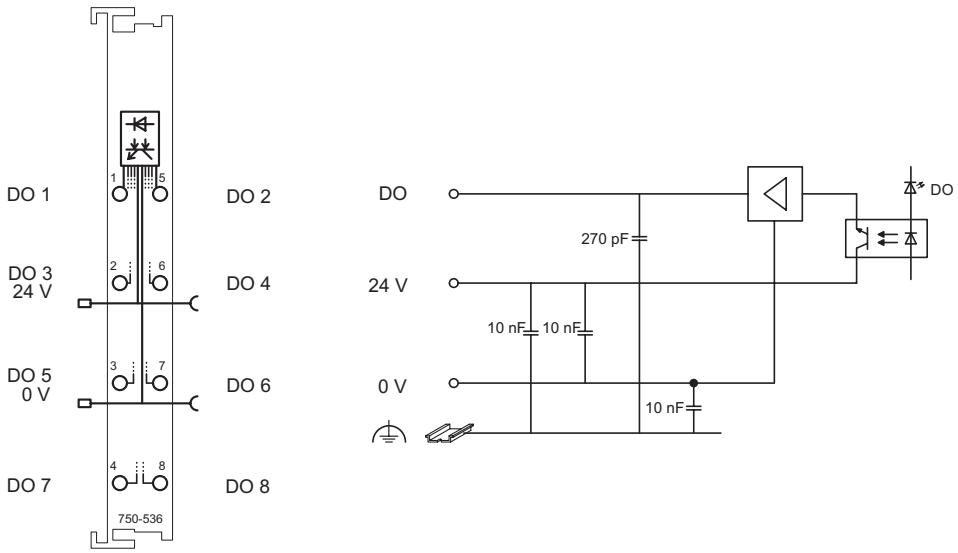

Fig. 2.1.1-3: 8 Channel Digital Output Module 750-536 g053601e

2.1.1.5 Technical Data

Module Specific Data		
Number of outputs	8	
Current consumption (internal)$_{max.}$	25 mA	
Voltage via power jumper contacts	DC 24 V (-25 % ... +30 %)	
Type of load	resistive, inductive, lamps	
Switching rate $_{max.}$	2 kHz	
Reverse voltage protection	ja	
Output current	0,5 A short-circuit-protected	
Energie dissipation $W_{max.}$ (unique switching off)	0,5 J $L_{max.} = 2\ W_{max.} / I^2$	
Isolation	500 V (System/Field)	
Current consumption $_{typ.}$(field side)	12 mA(per module) + load	
Internal bit width	8 bits out	
Dimensions (mm) W x H x L	12 x 64* x 100 * from upper edge of 35 DIN rail	
Weight	ca. 50 g	
Standards and Regulations (cf. Chapter 2.2 of the Coupler/Controller Manual)		
EMC-Immunity to interference (CE)	acc. to EN 61000-6-2 (01)	
EMC-Emission of interference (CE)	acc. to EN 61000-6-3 (01)	
Approvals (cf. Chapter 2.2 of the Coupler/Controller Manual)		
c UL us	$_{C}UL_{US}$ (UL508)	
CE	Conformity Marking	

More Information
Detailed references to the approvals are listed in the document "Overview Approvals WAGO-I/O-SYSTEM 750", which You can find on the CD ROM ELECTRONICC Tools and Docs (Item-No.: 0888-0412-0001-0101) or in the Internet under:
www.wago.com -> Service /Downloads /Documentation /WAGO-I/O-SYSTEM 750/System Description/.

2.1.1.6 Process Image

Output bit	**B7**	**B6**	**B5**	**B4**	**B3**	**B2**	**B1**	**B0**
Meaning	controls DO 8 – Channel 8	controls DO 7 – Channel 7	controls DO 6 – Channel 6	controls DO 5 – Channel 5	controls DO 4 – Channel 4	controls DO 3 – Channel 3	controls DO 2 – Channel 2	controls DO 1 – Channel 1

WAGO Kontakttechnik GmbH & Co. KG
Postfach 2880 • D-32385 Minden
Hansastraße 27 • D-32423 Minden
Phone: 05 71/8 87 – 0
Fax: 05 71/8 87 – 1 69
E-Mail: info@wago.com

Internet: http://www.wago.com