WAGO I/O SYSTEM 750

Fieldbus Independent I/O Modules

3-Phase Power Measurement Module 750-493

Manual

Version 1.0.1

WAGO INNOVATIVE CONNECTIONS

Copyright © 2007 by WAGO Kontakttechnik GmbH & Co. KG
All rights reserved.

WAGO Kontakttechnik GmbH & Co. KG
Hansastraße 27
D-32423 Minden

Phone: +49 (0) 571/8 87 – 0
Fax: +49 (0) 571/8 87 – 1 69

E-Mail: info@wago.com

Web: http://www.wago.com

Technical Support
Phone: +49 (0) 571/8 87 – 5 55
Fax: +49 (0) 571/8 87 – 85 55

E-Mail: support@wago.com

Every conceivable measure has been taken to ensure the correctness and completeness of this documentation. However, as errors can never be fully excluded, we would appreciate any information or ideas at any time.

E-Mail: documentation@wago.com

We wish to point out that the software and hardware terms as well as the trademarks of companies used and/or mentioned in the present manual are generally trademark or patent protected.

Content

1 Important Comments 5
1.1 Legal Principles 5
1.1.1 Copyright 5
1.1.2 Personnel Qualification 5
1.1.3 Intended Use 5
1.2 Symbols 6
1.3 Number Notation 6
1.4 Safety Notes 7
1.5 Scope 7

2 I/O Modules 8
2.1 Analog Input Modules 8
2.1.1 750-493 [3-Phase Power Measurement Module] 8
2.1.1.1 Variants 8
2.1.1.2 View 8
2.1.1.3 General Description 8
2.1.1.4 Indicators 9
2.1.1.5 Schematic Diagram 10
2.1.1.6 Technical Data 11
2.1.1.7 Process Image 12
2.1.1.7.1 Overview 12
2.1.1.7.2 Simple Process Image 13
2.1.1.7.2.1 Examples for a Simple Process Image 13
2.1.1.7.3 Flexible Process Image 14
2.1.1.7.3.1 Examples for a Flexible Process Image 14
2.1.1.7.4 Control and Status Bytes 15
2.1.1.7.5 Process Values 18
2.1.1.7.5.1 Input voltage 18
2.1.1.7.5.2 Input Current 18
2.1.1.7.5.3 Effective Power 19
2.1.1.8 Function Description 21
2.1.1.8.1 Measuring Technique 21
2.1.1.8.2 Calculation of Root Mean Square (RMS) Value 21
2.1.1.8.3 Measuring Period 22
2.1.1.8.4 Measurement of Effective Power 22
2.1.1.8.5 Measurement of Apparent Power 23
2.1.1.8.6 Measurement of Peak Current 25
2.1.1.9 Measuring Errors 26
2.1.1.9.1 Measuring Errors caused by Input Signal Override 26
2.1.1.9.2 Errors during Measurement of Direct Voltage 28
2.1.1.10 Current Transformers 29
2.1.1.10.1 Accuracy 29
2.1.1.10.2 Types of Current 29
2.1.1.10.3 Overcurrent Limiting Factor FS 29
2.1.1.10.4 Protection against Hazardous Touch Voltages 30
2.1.1.10.5 Additional Measuring Instruments in the Current Circuit 30

2.1.1.11 Examples of Connection 31
2.1.1.11.1 Power Measurement at a Machine 31
2.1.1.11.2 Measuring Current at a Motor 32
2.1.1.11.3 Power Measurement at Motors regulated by Frequency Converters 33
2.1.1.12 Setting the 750-493 Module Using Register Communication 35
2.1.1.12.1 Register Overview 36
2.1.1.12.2 Register Assignment 37
2.1.1.12.3 Control- and Status Byte at Register Communication 41
2.1.1.12.4 Examples of Setting Module 750-493 via Register Communication 43
2.1.1.12.4.1 Register read out 43
2.1.1.12.4.2 Writing a Register without Password Protection 43
2.1.1.12.4.3 Writing a Register with Password Protection 44
2.1.1.12.4.4 Application Example: Configuration of Power Consumption Measurement 47

1 Important Comments

To ensure fast installation and start-up of the units described in this manual, we strongly recommend that the following information and explanations are carefully read and abided by.

1.1 Legal Principles

1.1.1 Copyright

This manual is copyrighted, together with all figures and illustrations contained therein. Any use of this manual which infringes the copyright provisions stipulated herein, is not permitted. Reproduction, translation and electronic and photo-technical archiving and amendments require the written consent of WAGO Kontakttechnik GmbH & Co. KG. Non-observance will entail the right of claims for damages.

WAGO Kontakttechnik GmbH & Co. KG reserves the right to perform modifications allowed by technical progress. In case of grant of a patent or legal protection of utility patents all rights are reserved by WAGO Kontakttechnik GmbH & Co. KG. Products of other manufacturers are always named without referring to patent rights. The existence of such rights can therefore not be ruled out.

1.1.2 Personnel Qualification

The use of the product detailed in this manual is exclusively geared to specialists having qualifications in PLC programming, electrical specialists or persons instructed by electrical specialists who are also familiar with the valid standards. WAGO Kontakttechnik GmbH & Co. KG declines all liability resulting from improper action and damage to WAGO products and third party products due to non-observance of the information contained in this manual.

1.1.3 Intended Use

For each individual application, the components supplied are to work with a dedicated hardware and software configuration. Modifications are only permitted within the framework of the possibilities documented in the manuals. All other changes to the hardware and/or software and the non-conforming use of the components entail the exclusion of liability on part of WAGO Kontakttechnik GmbH & Co. KG.

Please direct any requirements pertaining to a modified and/or new hardware or software configuration directly to WAGO Kontakttechnik GmbH & Co. KG.

1.2 Symbols

Danger
Always abide by this information to protect persons from injury.

Warning
Always abide by this information to prevent damage to the device.

Attention
Marginal conditions must always be observed to ensure smooth operation.

ESD (Electrostatic Discharge)
Warning of damage to the components by electrostatic discharge. Observe the precautionary measure for handling components at risk.

Note
Routines or advice for efficient use of the device and software optimization.

More information
References on additional literature, manuals, data sheets and internet pages.

1.3 Number Notation

Number Code	Example	Note
Decimal	100	normal notation
Hexadecimal	0x64	C notation
Binary	'100' '0110.0100'	within inverted commas, nibble separated with dots

1.4 Safety Notes

Warning
Switch off the system prior to working on bus modules!

In the event of deformed contacts, the module in question is to be replaced, as its functionality can no longer be ensured on a long-term basis.

The components are not resistant against materials having seeping and insulating properties. Belonging to this group of materials is: e.g. aerosols, silicones, triglycerides (found in some hand creams).

If it cannot be ruled out that these materials appear in the component environment, then additional measures are to be taken:
- installation of the components into an appropriate enclosure
- handling of the components only with clean tools and materials.

Attention
Cleaning of soiled contacts may only be done with ethyl alcohol and leather cloths. Thereby, the ESD information is to be regarded.

Do not use any contact spray. The spray may impair the functioning of the contact area.

The WAGO-I/O-SYSTEM 750 and its components are an open system. It must only be assembled in housings, cabinets or in electrical operation rooms. Access must only be given via a key or tool to authorized qualified personnel.

The relevant valid and applicable standards and guidelines concerning the installation of switch boxes are to be observed.

ESD (Electrostatic Discharge)
The modules are equipped with electronic components that may be destroyed by electrostatic discharge. When handling the modules, ensure that the environment (persons, workplace and packing) is well grounded. Avoid touching conductive components, e.g. gold contacts.

1.5 Scope

This manual describes the Analog Input Module **750-493 3-Phase Power Measurement Module**of the modular WAGO-I/O-SYSTEM 750.

Handling, assembly and start-up are described in the manual of the Fieldbus Coupler. Therefore this documentation is valid only in the connection with the appropriate manual.

2 I/O Modules

2.1 Analog Input Modules

2.1.1 750-493 [3-Phase Power Measurement Module]

2.1.1.1 Variants

Item No.	Name
750-493	3-Phase Power Measurement Module 1 A
750-493/000-001	3-Phase Power Measurement Module 5 A

2.1.1.2 View

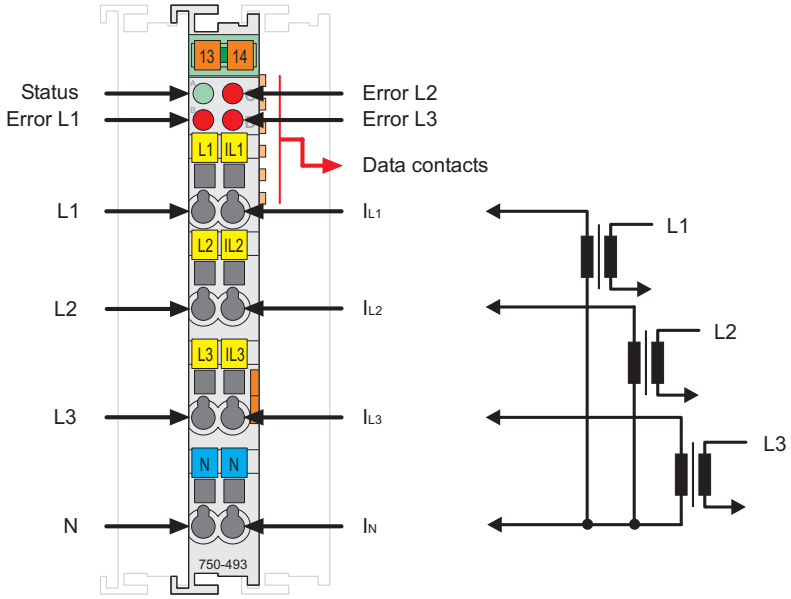

Fig. 2.1.1-1: View

2.1.1.3 General Description

The 3-phase power measurement module 750-493 measures the electrical data in a three-phase supply network.
The voltage is measured via network connection to L1, L2, L3 and N.
The current of the three phases is fed to I_{L1}, I_{L2}, I_{L3} and I_N via current transformers.

Non-sinusoidal voltage and current curves can also be read in with an acceptable accuracy of 1 % to 5 % under actual conditions, depending on the curve progression. The limiting frequency for the calculation is 2 kHz. The adjustability of the time interval for calculating the values enables optimization to be implemented for the most varying applications.

The 3-phase power measurement module transmits the root mean square values into the process image without requiring high computing power from the controller. For each phase, the effective power (P), the energy consumption (W) are calculated by the 3-phase power measurement module using the root mean square values of all measured voltages (V) and currents (I). For example, both the apparent power (S) and phase shift angle (φ) can be easily derived from these values.

Therefore, the 3-phase power measurement module provides a comprehensive network analysis via the fieldbus. By means of values such as voltage, current, effective and apparent power consumption or load condition, the operator is able to regulate the supply to a drive or machine in the best possible way and to protect the installation from damage and failure.

The individual output modules can be arranged in any combination when configuring the fieldbus node. An arrangement in groups is not necessary.

System voltage is used for voltage supply.

Attention
The I/O module does not have any power contacts. A power supply module must therefore be installed for field supply of the connected I/O modules.

This input module can be operated with all couplers/controllers (except the economy variants 750-320, -323, -324 and -327) of the WAGO I/O SYSTEM 750.

2.1.1.4 Indicators

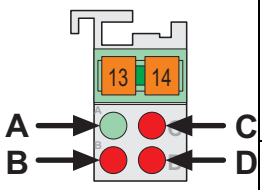

Fig. 2.1.1-2: Indicators g045202x

LED	Designation	Status	Function
A green	Status	off	No readiness for operation, or no, or faulted, internal bus communication
		on	Readiness for operation and undisturbed internal bus communication
B red	Error L1	off	No error
		on	Undervoltage[1)] L1 - N
C red	Error L2	off	No error
		on	Undervoltage[1)] L2 - N
D red	Error L2	off	No error
		on	Undervoltage[1)] L3 - N

[1)] The undervoltage limit can be set via register 36

2.1.1.5 Schematic Diagram

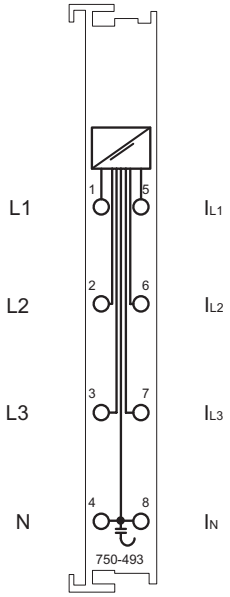

Fig. 2.1.1-3: Schematic diagram

g049301d

2.1.1.6 Technical Data

Inputs	
Number of inputs	6 (3 voltage inputs, 3 current inputs)
Measuring voltage $_{max..}$	500 VAC 3-phase
Input resistance voltage path type.	500 kΩ
Measuring current $_{max.}$	1 A (750-493) 5 A (750-493/000-001)
Input resistance current path type.	33 mΩ (750-493) 6.8 mΩ (750-493/000-001)
Resolution	16 bits
Frequency range with activated DC filter with deactivated DC filter	 10 Hz … 500 Hz 0 Hz … 500 Hz
Limiting frequency $_{approx.}$	2 kHz
Signal form	any (in direction of the frequency range and max. operating frequency)
Measuring error for current and voltage	0.5 % (of the upper range value)
Measuring procedure	True RMS with 64,000 samples / s
Measuring cycle time	configurable, preset at 50 ms per measured value
Measured values	Effective power, energy
I/O module-specific data	
Voltage supply	via system voltage internal bus (5 V)
Current consumption (internal)	115 mA
Electrical isolation	500 V system/supply
Bit width	2 x 48 Bit data 2 x 24 Bit control/status (optional)
Dimensions W x H* x D * (from upper edge of DIN 35 rail)	12 mm x 64 mm x 100 mm
Weight	approx. 60 g
Standards and directives (see section 2.2 in manual on coupler / controller)	
EMC CE immunity to interference	acc. to EN 50082-2 (96)
EMC CE Emission of interference	acc. to EN 50081-1 (93)
EMC Immunity to interference for shipbuilding	in accordance with Germanischer Lloyd (97)
EMC Emission of interference for shipbuilding	in accordance with Germanischer Lloyd (97)
Approvals (See Section 2.2 of the Coupler/Controller Manual)	
CE	Conformity marking

Further information
Detailed information about approval can be found in the document "Overview WAGO-I/O-SYSTEM 750 Approvals" on the ELECTRONIC Tools and Docs CD (Item No.: 0888-0412), or on the Internet at: www.wago.com → Dokumentation → WAGO-I/O-SYSTEM 750 → Systembeschreibung

2.1.1.7 Process Image

The 750-493 I/O module provides the fieldbus coupler/controller maximum 9 byte input and output process image via 3 logical channels. The data to be sent and received will be stored in up to 6 input and output bytes (D0 ... D5). 3 control bytes (C0 ... C2) and 3 status bytes (S0 … S2) are used for selecting process data for setting the module.

Attention
Mapping the process data of some I/O modules or their variations into the process image is specific for the fieldbus coupler/controller used. You will find both this information and the specific configuration of the relevant control/status bytes in the section on "Fieldbus Specific Configuration of Process Data" which describes the process image of the particular coupler/controller.

2.1.1.7.1 Overview

Input Data		Output Data	
S0	Status byte 0	C0	Control byte 0
D0	Input data word 1 (LSB)	D0	Output data word 1 (LSB)
D1	Input data word 1 (MSB)	D1	Output data word 1 (MSB)
S1	Status byte 1	C1	Control byte 1
D2	Input data word 2 (LSB)	D2	Output data word 2 (LSB)
D3	Input data word 2 (MSB)	D3	Output data word 2 (MSB)
S2	Status byte 2	C2	Control byte 2
D4	Input data word 3 (LSB)	D4	Output data word 3 (LSB)
D5	Input data word 3 (MSB)	D5	Output data word 3 (MSB)

2.1.1.7.2 Simple Process Image

Each input data word in a simple process image is assigned to one channel and can only read measured values from that channel.

Channel	Control byte	Appropriate input data word
1	C0	Input data word 1 (D0, D1)
2	C1	Input data word 2 (D2, D3)
3	C2	Input data word 3 (D4, D5)

If entering a process data index into a control byte in process data mode, the process data is returned in the associated process data word.

The process data indices are listed in section 2.1.1.7.4., “Control and Status Bytes”

The simple process image is enabled if bit enFlexProcImage (bit 3) in the operating mode register (register 32) is set to "0".

2.1.1.7.2.1 Examples for a Simple Process Image

Reading the voltage (rms value) of phases L1, L2 and L3

Enter 0x01 (channel index = 0, process data index = 1) into the control bytes C0, C1 and C2.

The voltage (rms value) of phase L1 is returned in process data word 1 (D0, D1), the voltage (rms value) of phase L2 is returned in process data word 2 (D2, D3) and the voltage (rms value) of phase L3 is returned in process data word 3 (D4, D5).

Reading the voltage (rms value) of phase L1, the current (rms value) of phase L2 and the effective power of phase L3

Enter 0x01 (channel index = 0, process data index = 1) into control byte C0, 0x00 (channel index = 0, process data index = 0) into control byte C1 and 0x02 (channel index = 0, process data index = 2) into control byte C2.

The voltage (rms value) of phase L 1 is returned in input data word 1 (D0, D1), the current (rms value) of phase L2 is returned in input data word 2 (D2, D3) and the effective power of phase L3 is returned in input data word 3 (D4, D5).

2.1.1.7.3 Flexible Process Image

An input data word in a flexible process image can read measured values from any channel.

The flexible process image is enabled if bit enFlexProcImage (bit 3) in the operating mode register (register 32) is set to "1".

2.1.1.7.3.1 Examples for a Flexible Process Image

Reading the current (rms value), the voltage (rms value) and the effective power of phase L2

Enter 0x10 (channel index 1, process data index 0) into control byte C0, 0x11 (channel index 1, process data index 1) into control byte C1 and 0x12 (channel index 1, process data index 2) into control byte C2.

The current (rms value) of phase L2 is returned in input data word 1 (D0, D1), the voltage (rms value) of phase L2 is returned in input data word 2 (D2, D3) and the effective power of phase L2 is returned in input data word 3 (D4, D5).

Reading the current (rms value), the voltage (rms value) of phase L1 and the voltage of phase L2

Enter 0x00 (channel index 0, process data index 0) into control byte C0, 0x01 (channel index 0, process data index 1) into control byte C1 and 0x11 (channel index 1, process data index 1) into control byte C2.

The current (rms value) of phase L1 is returned in process data word 1 (D0, D1), the voltage (rms value) of phase L1 is returned in process data word 2 (D2, D3) and the voltage (rms value) of phase L2 is returned in process data word 3 (D4, D5).

2.1.1.7.4 Control and Status Bytes

Control byte C0							
Bit 7	**Bit 6**	**Bit 5**	**Bit 4**	**Bit 3**	**Bit 2**	**Bit 1**	**Bit 0**
Reg_Com	0	Channel_ID		ProcDat_ID			

ProcDat_ID	Here, indicate the process data index for the measured value that you wish to read out using input data word 1.	
	0:	Current (mean square value)
	1:	Voltage (mean square value)
	2:	Effective power
	3:	reserved
	4:	Energy consumption
	5:	Maximum current
	6:	Maximum voltage
	7:	Maximum effective power
	8:	reserved
	9:	Minimum current
	10:	Minimum voltage
	11:	Minimum effective power
	12 .... 15:	reserved
Channel_ID	Here, indicate the channel index for the channel from which you wish to read out a measured value using input data word 1.	
	0:	Channel 1
	1:	Channel 2
	2:	Channel 3
	3:	reserved
Reg_Com	0:	Process data communication
0	These constants must be set to zero.	

Status byte S0							
Bit 7	**Bit 6**	**Bit 5**	**Bit 4**	**Bit 3**	**Bit 2**	**Bit 1**	**Bit 0**
Reg_Com	Err_L1	Channel_ID		ProcDat_ID			

ProcDat_ID	Index of measured value read out using input data word 1.	
Channel_ID	Index of channel from which a measured value was read out using input data word 1.	
Err_L1	0:	The voltage between L1 and N is greater than the set undervoltage threshold.- {}-
	1:	The voltage between L1 and N is less than the set undervoltage threshold. LED Err_L1 lights up.
Reg_Com	0:	Process data communication

Control byte C1							
Bit 7	**Bit 6**	**Bit 5**	**Bit 4**	**Bit 3**	**Bit 2**	**Bit 1**	**Bit 0**
Reg_Com	0	Channel_ID		ProcDat_ID			

ProcDat_ID	Here, indicate the process data index for the measured value that you wish to read out using input data word 2.	
	0:	Current (mean square value)
	1:	Voltage (mean square value)
	2:	Effective power
	3:	reserved
	4:	Energy consumption
	5:	Maximum current
	6:	Maximum voltage
	7:	Maximum effective power
	8:	reserved
	9:	Minimum current
	10:	Minimum voltage
	11:	Minimum effective power
	12 .... 15:	reserved
Channel_ID	Here, indicate the channel index for the channel from which you wish to read out a measured value using input data word 2.	
	0:	Channel 1
	1:	Channel 2
	2:	Channel 3
	3:	reserved
Reg_Com	0:	Process data communication
0	These constants must be set to zero.	

Status byte S1							
Bit 7	**Bit 6**	**Bit 5**	**Bit 4**	**Bit 3**	**Bit 2**	**Bit 1**	**Bit 0**
Reg_Com	Err_L2	Channel_ID		ProcDat_ID			

ProcDat_ID	Index of measured value read out using input data word 2.	
Channel_ID	Index of channel from which a measured value was read out using input data word 2.	
Err_L2	0:	The voltage between L2 and N is greater than the set undervoltage threshold.
	1:	The voltage between L2 and N is less than the set undervoltage threshold. LED Err_L2 lights up.
Reg_Com	0:	Process data communication

Control byte C2							
Bit 7	**Bit 6**	**Bit 5**	**Bit 4**	**Bit 3**	**Bit 2**	**Bit 1**	**Bit 0**
Reg_Com	0	Channel_ID		ProcDat_ID			

ProcDat_ID	Here, indicate the process data index for the measured value that you wish to read out using input data word 3.	
	0:	Current (mean square value)
	1:	Voltage (mean square value)
	2:	Effective power
	3:	reserved
	4:	Energy consumption
	5:	Maximum current
	6:	Maximum voltage
	7:	Maximum effective power
	8:	reserved
	9:	Minimum current
	10:	Minimum voltage
	11:	Minimum effective power
	12 .... 15:	reserved
Channel_ID	Here, indicate the channel index for the channel from which you wish to read out a measured value using input data word 3.	
	0:	Channel 1
	1:	Channel 2
	2:	Channel 3
	3:	reserved
Reg_Com	0:	Process data communication
0	These constants must be set to zero.	

Status byte S2							
Bit 7	**Bit 6**	**Bit 5**	**Bit 4**	**Bit 3**	**Bit 2**	**Bit 1**	**Bit 0**
Reg_Com	Err_L2	Channel_ID		ProcDat_ID			

ProcDat_ID	Index of measured value read out using input data word 3.	
Channel_ID	Index of channel from which a measured value was read out using input data word 3.	
Err_L3	0:	The voltage between L3 and N is greater than the set undervoltage threshold.
	1:	The voltage between L3 and N is less than the set undervoltage threshold. LED Err_L3 lights up.
Reg_Com	0:	Process data communication

2.1.1.7.5 Process Values

2.1.1.7.5.1 Input voltage

Process values of modules 750-493 and 750-493/000-001			
Input voltage U_L 0 ... 500 V	Numeric value Binary Output value	Hex.	Dec.
0.0	'0000.0000.0000.0000'	0x0000	0
50.0	'0000.0001.1111.0100'	0x01F4	500
100.0	'0000.0011.1110.1000'	0x03E8	1000
150.0	'0000.0101.1101.1100'	0x05DC	1500
200.0	'0000.0111.1101.0000'	0x07D0	2000
250.0	'0000.1001.1100.0100'	0x09C4	2500
300.0	'0000.1011.1011.1000'	0x0BB8	3000
350.0	'0000.1101.1010.1100'	0x0DAC	3500
400.0	'0000.1111.1010.0000'	0x0FA0	4000
450.0	'0001.0001.1001.0100'	0x1194	4500
500.0	'0001.0011.1000.1000'	0x1388	5000

2.1.1.7.5.2 Input Current

Process values for module 750-493			
Input current I_L 0 ... 1 A	Numeric value Binary Output value	Hex.	Dec.
0.000	'0000.0000.0000.0000'	0x0000	0
0.100	'0000.0000.0110.0100'	0x0064	100
0.200	'0000.0000.1100.1000'	0x00C8	200
0.300	'0000.0001.0010.1100'	0x012C	300
0.400	'0000.0001.1001.0000'	0x0190	400
0.500	'0000.0001.1111.0100'	0x01F4	500
0.600	'0000.0010.0101.1000'	0x0258	600
0.700	'0000.0010.1011.1100'	0x02BC	700
0.800	'0000.0011.0010.0000'	0x0320	800
0.900	'0000.0011.1000.0100'	0x0348	900
1.000	'0000.0011.1110.1000'	0x03E8	1000

Process values for module 750-493/000-001			
Input current I_L 0 ... 5 A	Numeric value		
	Binary Output value	Hex.	Dec.
0.000	'0000.0000.0000.0000'	0x0000	0
0.500	'0000.0000.0110.0100'	0x0064	100
1.000	'0000.0000.1100.1000'	0x00C8	200
1.500	'0000.0001.0010.1100'	0x012C	300
2.000	'0000.0001.1001.0000'	0x0190	400
2.500	'0000.0001.1111.0100'	0x01F4	500
3.000	'0000.0010.0101.1000'	0x0258	600
3.500	'0000.0010.1011.1100'	0x02BC	700
4.000	'0000.0011.0010.0000'	0x0320	800
4.500	'0000.0011.1000.0100'	0x0348	900
5.000	'0000.0011.1110.1000'	0x03E8	1000

2.1.1.7.5.3 Effective Power

Process values for module 750-493			
Effective power P_L 0 ... 500 W	Numeric value		
	Binary Output value	Hex.	Dec.
0.0	'0000.0000.0000.0000'	0x0000	0
50.0	'0000.0001.1111.0100'	0x01F4	500
100.0	'0000.0011.1110.1000'	0x03E8	1000
150.0	'0000.0101.1101.1100'	0x05DC	1500
200.0	'0000.0111.1101.0000'	0x07D0	2000
250.0	'0000.1001.1100.0100'	0x09C4	2500
300.0	'0000.1011.1011.1000'	0x0BB8	3000
350.0	'0000.1101.1010.1100'	0x0DAC	3500
400.0	'0000.1111.1010.0000'	0x0FA0	4000
450.0	'0001.0001.1001.0100'	0x1194	4500
500.0	'0001.0011.1000.1000'	0x1388	5000

Process values for module 750-493/000-001			
Effective power P_L 0 ... 2500 W	Numeric value		
	Binary Output value	Hex.	Dec.
0,0	'0000.0000.0000.0000'	0x0000	0
250.0	'0000.0001.1111.0100'	0x01F4	500
500.0	'0000.0011.1110.1000'	0x03E8	1000
750.0	'0000.0101.1101.1100'	0x05DC	1500
1000.0	'0000.0111.1101.0000'	0x07D0	2000
1250.0	'0000.1001.1100.0100'	0x09C4	2500
1500.0	'0000.1011.1011.1000'	0x0BB8	3000
1750.0	'0000.1101.1010.1100'	0x0DAC	3500
2000.0	'0000.1111.1010.0000'	0x0FA0	4000
2250.0	'0001.0001.1001.0100'	0x1194	4500
2500.0	'0001.0011.1000.1000'	0x1388	5000

2.1.1.8 Function Description

2.1.1.8.1 Measuring Technique

The 3-phase power measurement module operates using 6 analog/digital converters for acquiring the current and voltage levels in all three phases. The values are scanned in a time frame of about 16 µs.

Acquisition and processing of the three phases is performed in a time-synchronous, identical form. Signal processing for one phase is described below. This description of course applies accordingly for all three phases. The total power and total energy consumption is the sum, and the mean current the average for the three phases.

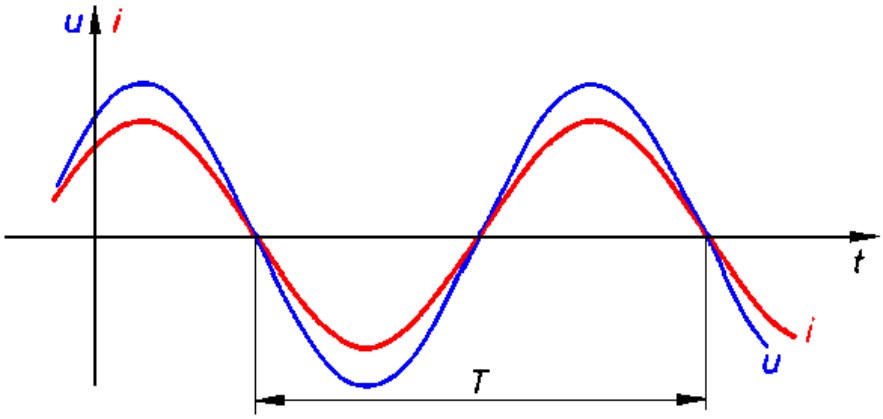

Fig. 2.1.1-4: Progression of voltage u and current i p049300x

2.1.1.8.2 Calculation of Root Mean Square (RMS) Value

The root mean square value for voltage and current is calculated over a defined measuring period, here T (cycle duration). Calculation is performed using the following equations:

$$U = \sqrt{\frac{1}{n}\sum_{1}^{n} u_{(t)}^{2}}\ , \quad I = \sqrt{\frac{1}{n}\sum_{1}^{n} i_{(t)}^{2}}$$

u(t): Instantaneous value for voltage
i(t): Instantaneous value for current
n: Number of values measured

1280 measured values are used in the calculation for measurement in a 50 Hz network (cycle duration T = 20 ms).

2.1.1.8.3 Measuring Period

Selection of the appropriate measuring period is vital for measurement quality. The measuring period must be at least ¼ T. Meaningful values are ¼ T, ½ T, T and multiples of ½ T. The measured value will vary markedly if you select a random period that is not a multiple of ½ T and that is distinctly less than 5 T.

The default setting for the measuring period is 50 ms, which corresponds to 2.5 T in a 50 Hz grid and 3 T in a 60 Hz grid. Experience has shown this to represent a good compromise between measuring speed and stability. Only use other values when special measuring requirements are demanded (such as high measuring speed, low signal frequencies or special current circuits).

2.1.1.8.4 Measurement of Effective Power

The 3-phase power measurement module measures the effective power P according to

$$P = \frac{1}{n}\sum_{1}^{n} u_{(t)} \cdot i_{(t)}$$

P: Effective power
n: Number of scans (64,000 samples / s)
u(t): Instantaneous value for voltage
i(t): Instantaneous value for current

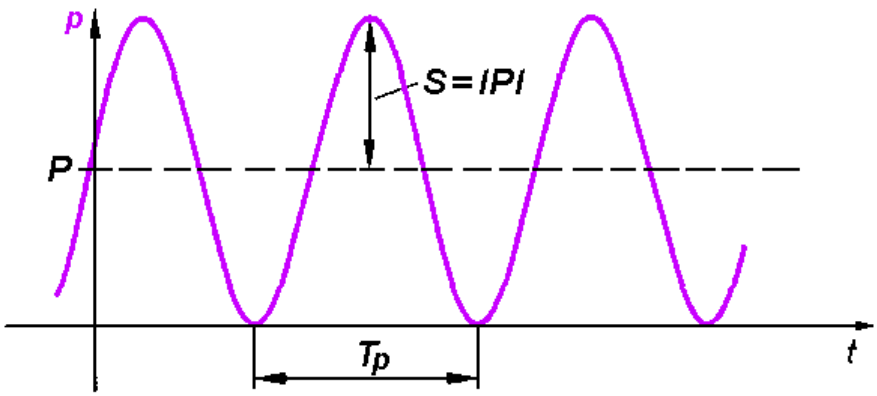

Fig. 2.1.1-5: Progression for power s(t) p049301x

In the first step, the power s(t) is calculated for each scan time:

$$s_{(t)} = u_{(t)} \cdot i_{(t)}$$

The mean value is generated over the entire measuring period. In this case, selection of an appropriate period is of equal importance as described in the section on measurement of mean square value (as the period may only be changed mutually for U, I and P).

The power frequency is two times that of the corresponding current and voltage.

2.1.1.8.5 Measurement of Apparent Power

Not all loads are purely resistive in real grids. Phase shifting therefore occurs between the current and the voltage. However, this does not effect the method for determining the RMS values for current and voltage described previously.

Apparent power is yielded from the product of mean square voltage and mean square current.

$$S = U \cdot I$$

Effective power is less than apparent power.

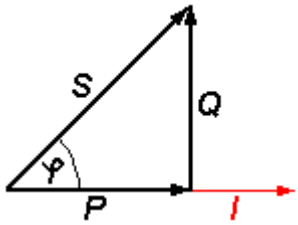

Fig. 2.1.1-6: Power triangle p049302x

S: Apparent power
P: Effective power
Q: Reactive power
φ: Phase shift angle

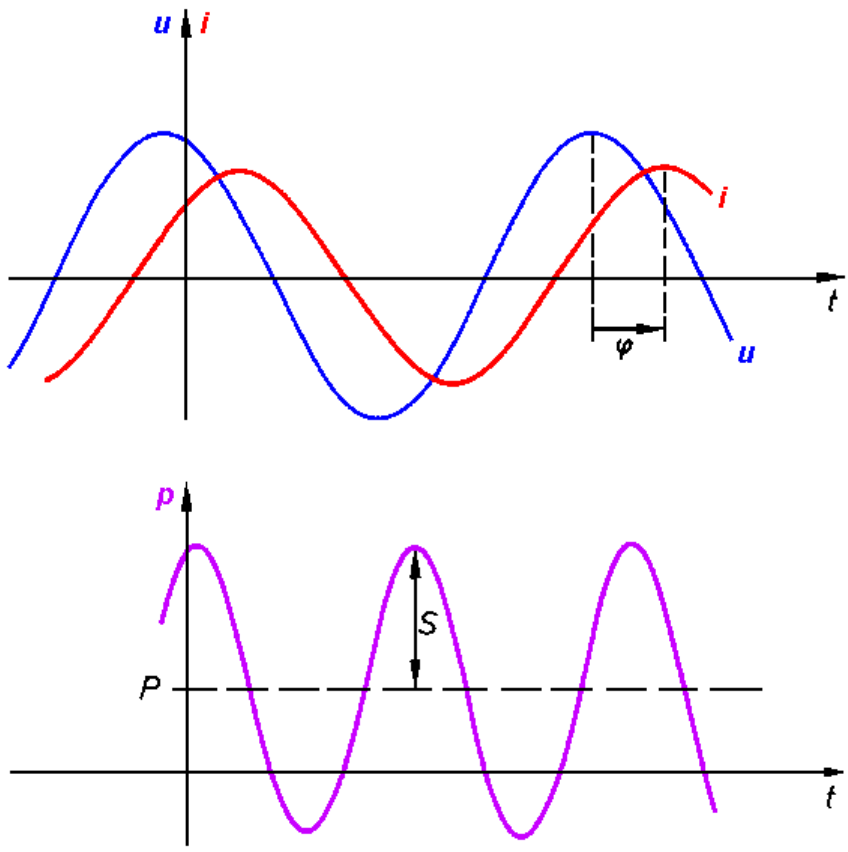

Fig. 2.1.1-7: Progression of u(t), i(t), p(t) with phase shift angle φ p049303x

In this application, further information about the grid and its loads is essential.

- Apparent power S
- Reactive power Q
- Power factor cos φ

The 3-phase power measurement module determines the following values:

- Effective power P
- Mean square voltage U
- Mean square current I

From these values the following variables can be calculated:

Apparent power:

$$S = U \cdot I$$

Reactive power:

$$Q = \sqrt{S^2 - P^2}$$

Power factor:

$$\cos\varphi = \frac{P}{S}$$

2.1.1.8.6 Measurement of Peak Current

Here, a distinction must be drawn between the peak instantaneous value and the peak mean square root value. The peak mean square root is always based only on the peak value within the defined measuring period.

2.1.1.9 Measuring Errors

2.1.1.9.1 Measuring Errors caused by Input Signal Override

The variants for the 3-phase power measurement module differ only in the input circuit. The output value is the same for all variants at rated current (unity control factor setting).

Item No.	Rated current	Output for mean square value for rated current
750-493	1.0 A	1000
750-493/000-001	5.0 A	1000

A valid measured value (≤ 1414) is read in for each supporting point when the input values for current lie within the permissible range, i.e. not greater than the rated current for the module.

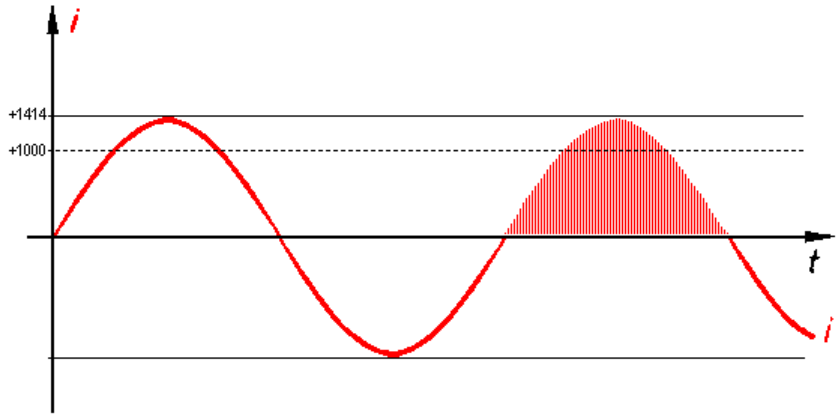

Fig. 2.1.1-8: Current progression and sampling without input signal override p049304x

In the example shown here (unity control factor setting), the module outputs a value of 1000 for the mean square current value.

When the input current exceeds the rated current for the module, the module outputs the value 1414 also for peak values (which are greater than the rated current times the square root of 2). A measuring error caused by input signal override then occurs at these supporting points.

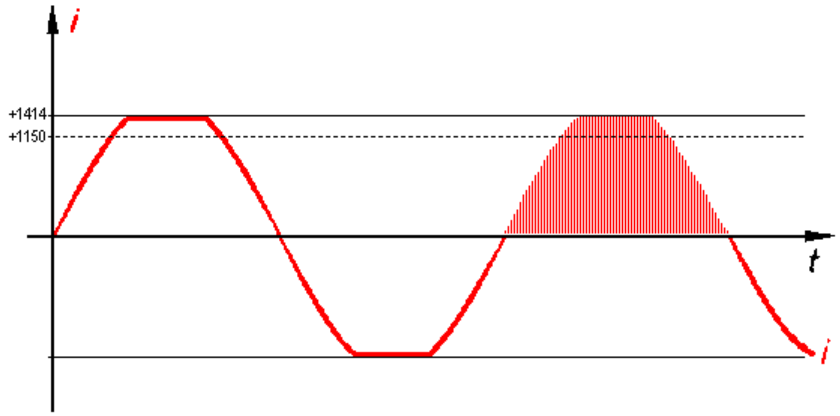

Fig. 2.1.1-9: Current progression and sampling at 20 % input signal override p049305x

In the example shown here, the module outputs a value of around 1150 for the mean square current value. A minor measuring error is now already present for this value.

The greater the input override, the more the measuring errors increase at a greater number of supporting points due to input signal override.

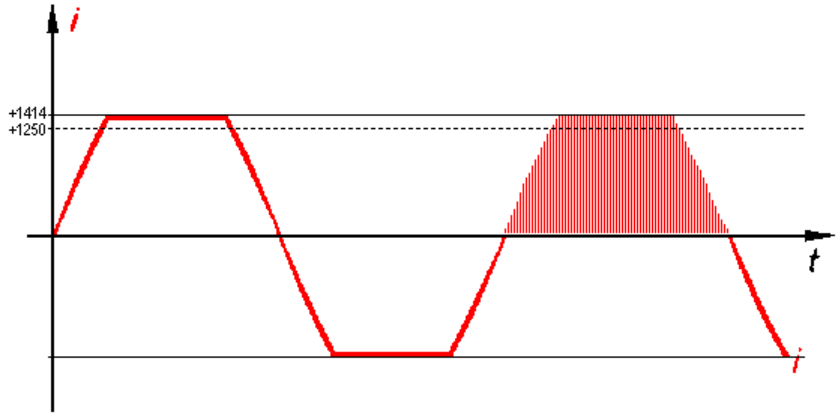

Fig. 2.1.1-10: Current progression and sampling at 50 % input signal override p049306x

In the example shown here, the module outputs a value of around 1250 for the mean square current value. A relative measuring error is now already present for this value.

As input signal override increases, the RMS value "I" will also continue to rise with the input current "î", but no longer in a linear relationship to the input signal - as a result the "Δ" error increases sharply!

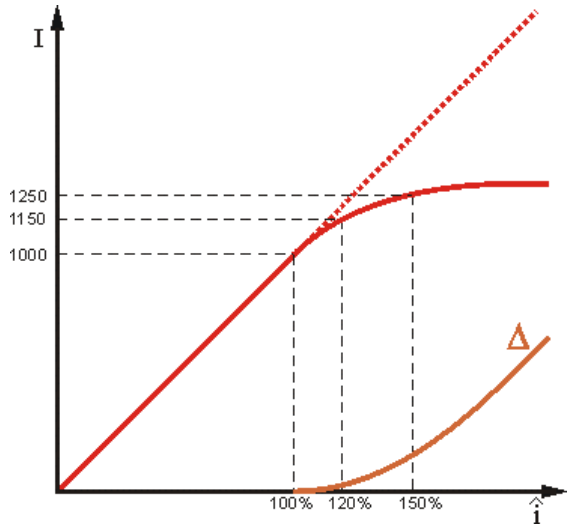

Fig. 2.1.1-11: Error as a function of input signal override level p049307x

The indicated output values are typical for input signal override values of 20 % and 50 %. These may differ from module to module on account of the component tolerance limits.

2.1.1.9.2 Errors during Measurement of Direct Voltage

Minor inaccuracies may creep in when measuring low DC voltages, as the voltage inputs exhibit minor non-linearity.

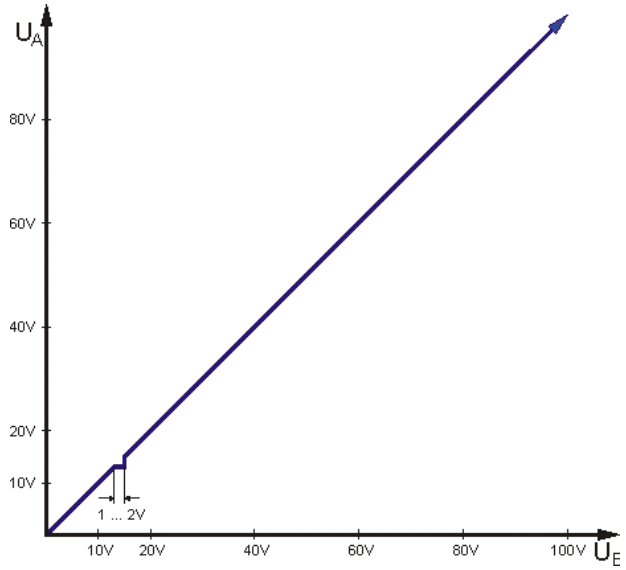

Fig. 2.1.1-12: Measuring errors for direct voltage p049308x

This step-like drop amounts to around 1 V ... 2 V and normally occurs between 10 V and 20 V.

2.1.1.10 Current Transformers

Normally, selection of the current transformers for the 3-phase power measurement module is not a critical factor. The internal resistance in the current path for the 3-phase power measurement module is so low that it can be neglected when considering the overall resistance of the current loop. The transformers must provide a rated secondary current of 1 A. Any rated primary current I_{pn} may be selected. The normal, permissible overload level of 1.2 x I_{pn} presents no problems for the 3-phase power measurement module, but can, however, lead to minor measurement inaccuracies.

2.1.1.10.1 Accuracy

Please note that the overall accuracy of the setup consisting of the 3-phase power measurement module and the current transformers is essentially a function of the accuracy category for the transformers.

Attention
Configuration with one Class 0.5 current transformer can not be approved or certified. The 3-phase power measurement module is not an approved utility billing meter as defined in the standard for electricity meters (DIN 43 586).

2.1.1.10.2 Types of Current

The 3-phase power measurement module can measure any types of current up to a limiting proportion of 2 kHz. As these types of current are frequently generated by power inverters and frequencies of 50 Hz or less can even contain a DC portion, an electronic transformer should be used for these applications.

2.1.1.10.3 Overcurrent Limiting Factor FS

The overcurrent limiting factor (FS) for a current transformer indicates at which multiple of its rated primary current saturation occurs with the current transformer for protecting the measuring instruments connected to the system.

Caution
The 3-phase power measurement module may not be operated continuously with a load exceeding 5 A! Install additional interposing transformers with a transformation ratio of 5 A / 1 A or 1 A / 5 A in systems in which the overcurrent limiting factor for the transformer permits secondary currents higher than 5 A!

2.1.1.10.4 Protection against Hazardous Touch Voltages

No hazardous voltage is produced when the 3-phase power measurement module is used as specified, with appropriate current transformers. Secondary voltage is only a few Volts. The following fault cases can result in high voltage levels:

- Open current path for one or more transformer.
- Disconnected/Cut PEN conductor at the voltage measuring end of the 3-phase power measurement module
- General insulation fault

Caution
All of the wiring for the 3-phase power measurement module must be provided with protection against accidental contact, along with the corresponding caution signs! Insulation must be designed for the maximum phase-to-phase voltage for the system being measured.

The 3-phase power measurement module permits a maximum voltage of 500 V for normal operating conditions. The phase-to-phase voltage at the current end may not exceed 500 V. Use an interposing transformer stage for higher voltages.

A 3-phase power measurement module is equipped with a protective impedance of 500 kΩ at the voltage measurement end. If the PEN conductor is not connected, and only one connection under power at the voltage measuring end, a voltage of 230 VAC to ground is yielded in a 3-phase system with a phase conductor voltage of 400 VAC. This must be measured using a Multimeter at the current measuring end with 10 MΩ internal resistance; this does not represent an insulation fault.

2.1.1.10.5 Additional Measuring Instruments in the Current Circuit

Please note that adding additional measuring instruments (such as ammeters) to the current circuit can substantially increase the overall apparent power.

In addition, connection I_N for the 3-phase power measurement module must form a star point (neutral) for the three secondary windings. Additional measuring equipment must therefore be potential-free and wired accordingly.

2.1.1.11 Examples of Connection

Attention
Please note that current transformers from some manufacturers may not be operated with an open circuit! Connect the 3-phase power measurement module to the current transformer secondary windings before starting up the current transformers.

2.1.1.11.1 Power Measurement at a Machine

Voltage is measured via connections L1, L2, L3 and N.

Current is measured using three current transformers via connections I_{L1}, I_{L2}, I_{L3} and I_N (neutral point for current transformers).

Caution
When making the connections do not confuse the current and voltage paths, as connecting system voltage directly to the terminals for the current transformers (input resistance typically 33 mΩ) can destroy the power measurement module!

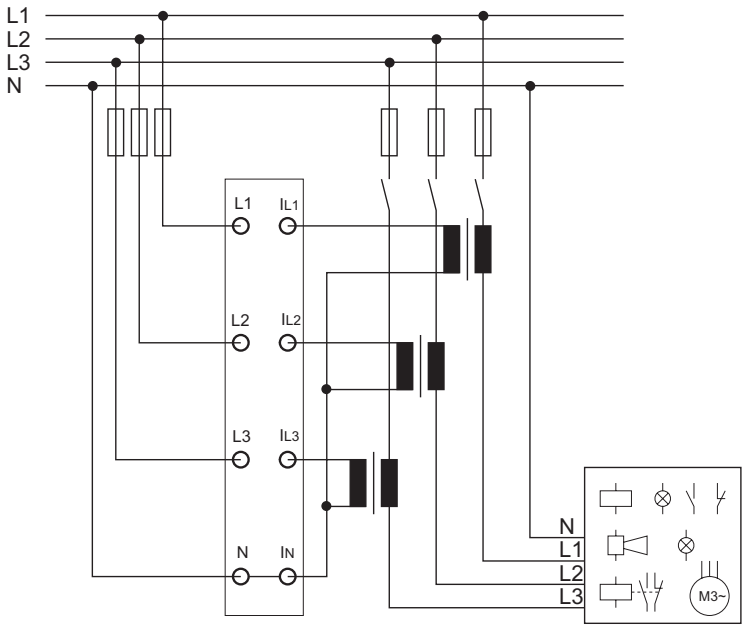

Fig. 2.1.1-13: Power measurement at a machine g049304x

Note
If you measure negative power values in a circuit, check to ensure that the associated current transformer circuit has been connected in the proper direction.

2.1.1.11.2 Measuring Current at a Motor

Caution
If you do not connect terminal N with the PEN conductor of your supply system (for example when connecting the 3-phase power measurement module for pure current measurement), this terminal (N) must be grounded to prevent any hazardous excessive voltage in the event of a malfunction of the current transformer!

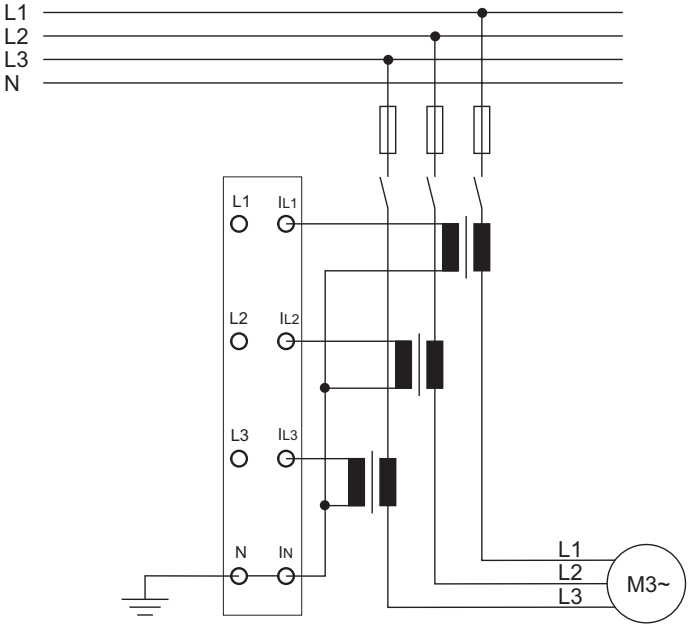

Fig. 2.1.1-14: Measuring current at a motor

g049305x

2.1.1.11.3 Power Measurement at Motors regulated by Frequency Converters

The example here illustrates power measurement at several three-phase motors controlled by one frequency converter (ac power converter), such as is used in a conveyor system. Each of these motors is monitored by a 3-phase power measurement module.

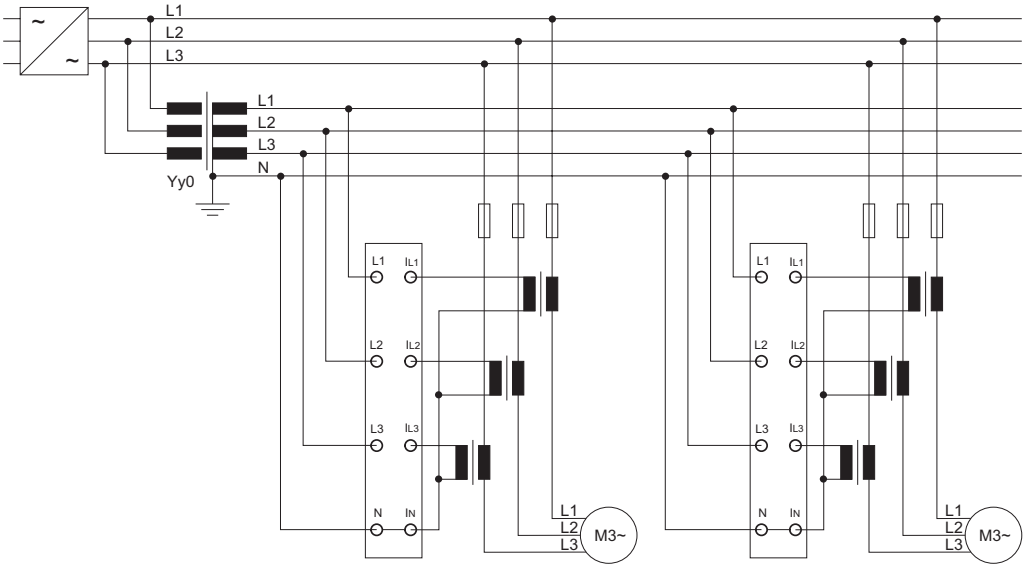

Fig. 2.1.1-15: Power measurement at motors regulated by frequency converters g049306x

Electrical isolation of the three-phase transformer (Yy0) connected upstream of the power measurement module voltage circuit allows measurement to be conducted downcircuit of the frequency converter.

Caution
On account of electrical isolation by the three-phase transformer, you must ground terminal N of the power measurement modules to prevent any excessive, hazardous voltage in the event of a current transformer fault.

Note
The three-phase transformer must have a transformation ratio of 1:1 and may not result in any signal phase shifting!

As the high-frequency portions only have a minor effect on the motors, distortion caused by the three-phase transformer during transmission of the harmonic waves generated by the frequency converter will have virtually no effect on practical measurement.

Distribution of the power is mapped very well, thanks to the use of one power measurement module for each motor. This also allows any elevated current consumption by an individual motor to be detected at an early stage.

Measurement of DC voltage/current (such as holding current for synchronous motors) is not possible with this configuration. Practical results will be yielded

on the basis of the three-phase transformers and current transformers that are used for voltage and current levels with a frequency greater than 5 Hz.

2.1.1.12 Setting the 750-493 Module Using Register Communication

The operating mode and the parameters for the 750-493 module can be set using the register communication.

The values for channel 1 are set via the control and status bytes C0/S0 for the addressing and via the data bytes D0 and D1 for the transmission of the values to be set.

Attention
Prior to writing to the registers, "0x1235" must be written to the password register 31.

Bits 0 ... 5 of the control byte contain the register number.
The access direction (read/write) is set with bit 6 (R/W) of the control byte.
In order to activate the register communication, bit 7 (REG_COM) in the control byte is set to "1".

Attention
During register communication, process data cannot be accessed!
Process data that may be displayed are not valid!

The values to be set are written to the output data bytes D0 and D1 and can be read back with the input data bytes D0 and D1.

Note
After writing to the registers, the set values should be verified by reading the registers.

The corresponding control byte bits are mirrored in the status byte bits 0 ... 5 and 7.

Attention
After writing to the registers, the password register 31 must be reset with "0x0000". Otherwise write access to these registers is possible until the supply voltage is disconnected.

Similar to channel 1, channel 2 is set using control and status bytes C1/S1 and data bytes D2 and D3; channel 3 using control and status bytes C2/S2 and data bytes D4 and D5.

2.1.1.12.1 Register Overview

Channel	Function	Control /status byte	Register	Data bytes
1 (L1)	Overflow register for energy consumption	C0/S0	0	D0/D1
	Command register	C0/S0	7	D0/D1
	Mode setting	C0/S0	32	D0/D1
	Scaling factor for measuring energy level	C0/S0	35	D0/D1
	Undervoltage threshold	C0/S0	36	D0/D1
	Divisor for current transformer ratio	C0/S0	37	D0/D1
	Time constants for automatic deleting of minimum and maximum values	C0/S0	38	D0/D1
	Measuring cycle time	C0/S0	39	D0/D1

Channel	Function	Control /status byte	Register	Data bytes
2 (L2)	Overflow register for energy consumption	C1/S1	0	D2/D3
	Command register	C1/S1	7	D2/D3
	Mode setting	C1/S1	32	D2/D3
	Scaling factor for measuring energy level	C1/S1	35	D2/D3
	Undervoltage threshold	C1/S1	36	D2/D3
	Divisor for current transformer ratio	C1/S1	37	D2/D3
	Time constants for automatic deleting of minimum and maximum values	C1/S1	38	D2/D3
	Measuring cycle time	C1/S1	39	D2/D3

Channel	Function	Control /status byte	Register	Data bytes
3 (L3)	Overflow register for energy consumption	C2/S2	0	D4/D5
	Command register	C2/S2	7	D4/D5
	Mode setting	C2/S2	32	D4/D5
	Scaling factor for measuring energy level	C2/S2	35	D4/D5
	Undervoltage threshold	C2/S2	36	D4/D5
	Divisor for current transformer ratio	C2/S2	37	D4/D5
	Time constants for automatic deleting of minimum and maximum values	C2/S2	38	D4/D5
	Measuring cycle time	C2/S2	39	D4/D5

2.1.1.12.2 Register Assignment

The following tables display the assignments and factory settings for the individual registers. The factory settings are the same for all three channels.

Register	Function	Data type	Access	Factory setting
0	Overflow register for energy consumption	UINT	R/W	----
This overflow register is incremented when the register for energy consumption (can be read out via process data index 4) begins to overrun. 32 bits are available for storing the energy consumption data. The overflow register for energy consumption can only be read out via register communication. When the energy consumption data is deleted, this register is likewise deleted.				

Register	Function	Data type	Access	Factory setting
7	Command register	UINT	R/W	0x0000
0x0000	No function If needed, enter the value 0x0000 into the command register to delete the command register.			
0x1004	Deleting energy consumption data (user password must be set) Write the value 0x1004 to the command register to delete the energy consumption elements stored in the process data (process data index 4) and the overflow register for energy consumption (R0).			
0x1005	Deleting the maximum current value Write the value 0x1005 to the command register to delete the maximum current value stored in the process data (process index 5).			
0x1006	Deleting the maximum voltage value Write the value 0x1006 to the command register to delete the maximum voltage value stored in the process data (process index 6).			
0x1007	Deleting the maximum power value Write the value 0x1007 to the command register to delete the maximum power value stored in the process data (process index 7).			
0x1009	Deleting the minimum current value Write the value 0x1009 to the command register to delete the minimum current value stored in the process data (process index 5).			
0x100A	Deleting the minimum voltage value Write the value 0x100A to the command register to delete the minimum voltage value stored in the process data (process index 6).			
0x100B	Deleting the minimum power value Write the value 0x100B to the command register to delete the minimum power value stored in the process data (process index 7).			
0x1014	Intermediate saving of energy consumption value (user password must be set) Module 750-493 registers the energy consumption in the RAM and only saves these values to the EEPROM in 15 minute cycles. If you wish to deactivate module 750-493 without losing the energy consumption value measured since the last storage cycle, you can store the current value manually to the EEPROM using this command.			
⚠	**Attention** The EEPROM manufacturer indicates that approximately 100,000 - and typically 1 million - write operations are possible with the module. Based on these numbers, and estimating that the power consumption is written to the EEPROM every 15 minutes in continuous operation, the power consumption memory has: - a minimum life cycle of 2.85 years, - a typical life cycle of 28.5 years.			
0x1020	Deleting all minimum and maximum values Write the value 0x1020 to the command register to delete all minimum and maximum values.			
0x7000	Restoring factory settings (user password must be set) Write the value 0x7000 to the command register to restore the default (as-delivered) status of registers 32 and 35 – 39.			

Register	Function	Data type	Access	Factory setting
32	Mode setting	Flags	R/W	0x0020
Bit 0: enUserScaling				
0: *	User scaling deactivated; the transformation ratio is 1:1.			
1:	User scaling activated; the transformation ratio is 1: (divisor for the current transformer ratio).			
Bit 1: reserved				
Bit 2: disWdTimer				
0: *	Watchdog timer active: The watchdog trips if no process data is received within 100 ms.			
1:	Watchdog timer not active:			
Bit 3: enFlexProcImage				
0: *	Simple process image (compatibility mode)			
1:	Flexible process image			
Bit 4: skipDCFilter				
0: *	DC filter active			
1:	The DC filter is bypassed			
Bit 5: reserved				
Bit 6: invEnergySign				
0: *	Energy consumption measurement not inverted.			
1:	Energy consumption measurement inverted (generating operation)			
Bit 7: enClrMinMaxValues				
0: *	Automatic deleting of minimum and maximum current, voltage and power values not activated.			
1:	Automatic deleting of minimum and maximum current, voltage and power values activated.			
Bit 8 … 15: reserved				

* Factory setting

Register	Function	Data type	Access	Factory setting
35	Scaling factor for measuring energy level	UINT	R/W	0x0004 (0.01kWh / 0.05 kWh)

	750-493	750-493/000-001
0:	1 mWh	5 mWh
1:	0.01 Wh	0.05 Wh
2:	0.1 Wh	0.5 Wh
3:	1 Wh	5 Wh
4: *	0.01 kWh	0.05 kWh
5:	0.1 kWh	0.5 kWh
6:	1 kWh	5 kWh
≥7:	reserved	reserved

* Factory setting

Register	Function	Data type	Access	Factory setting
36	Undervoltage threshold; resolution 0.1 V	UINT	R/W	0x0064 (10 V)

Register	Function	Data type	Access	Factory setting
37	Divisor for current transformer ratio; must be activated via register 32, bit 0	UINT	R/W	0x0001 (ü = 1)

Register	Function	Data type	Access	Factory setting
38	Time constant for automatic deleting of minimum and maximum values; resolution 10 ms; must be activated via register 32, bit 7	UINT	R/W	0x00C8 (2000 ms)

Register	Function	Data type	Access	Factory setting
39	Measuring cycle period; resolution 1 ms	UINT	R/W	0x0032 (50 ms)

2.1.1.12.3 Control- and Status Byte at Register Communication

The following tables show the assignment of the control and status bytes for register communication.

The register communication is acknowledged by the I/O module with bits 0 ... 5 and 7 in the corresponding status byte.

Control byte C0							
Bit 7	**Bit 6**	**Bit 5**	**Bit 4**	**Bit 3**	**Bit 2**	**Bit 1**	**Bit 0**
REG_ COM	R/W	Register number					

Registernumber	Register number of selected function (cf. section 2.1.1.12.1, "Register Overview")	
R/W	0:	Read access
	1:	Write access
REG_COM	1:	Register communication

Status byte S0							
Bit 7	**Bit 6**	**Bit 5**	**Bit 4**	**Bit 3**	**Bit 2**	**Bit 1**	**Bit 0**
REG_ COM	X	Register number					

Registernumber	Register number of selected function (cf. section 2.1.1.12.1, "Register Overview") ,mirrored from control byte 0	
REG_COM	1:	Register communication (mirrored from control byte C0)
X	reserved	

Control byte C1							
Bit 7	**Bit 6**	**Bit 5**	**Bit 4**	**Bit 3**	**Bit 2**	**Bit 1**	**Bit 0**
REG_ COM	R/W	Register number					

Registernumber	Register number of selected function (cf. section 2.1.1.12.1, "Register Overview")	
R/W	0:	Read access
	1:	Write access
REG_COM	1:	Register communication

Status byte S1							
Bit 7	**Bit 6**	**Bit 5**	**Bit 4**	**Bit 3**	**Bit 2**	**Bit 1**	**Bit 0**
REG_ COM	X	Register number					

Registernumber	Register number of selected function (cf. section 2.1.1.12.1, "Register Overview"), mirrored from control byte 1	
REG_COM	1:	Register communication (mirrored from control byte C1)
X	reserved	

Control byte C2							
Bit 7	**Bit 6**	**Bit 5**	**Bit 4**	**Bit 3**	**Bit 2**	**Bit 1**	**Bit 0**
REG_ COM	R/W	Register number					

Registernumber	Register number of selected function (cf. section 2.1.1.12.1, "Register Overview")	
R/W	0:	Read access
	1:	Write access
REG_COM	1:	Register communication

Status byte S2							
Bit 7	**Bit 6**	**Bit 5**	**Bit 4**	**Bit 3**	**Bit 2**	**Bit 1**	**Bit 0**
REG_ COM	X	Register number					

Registernumber	Register number of selected function (cf. section 2.1.1.12.1, "Register Overview"), mirrored from control byte 2	
REG_COM	1:	Register communication (mirrored from control byte C2)
X	reserved	

2.1.1.12.4 Examples of Setting Module 750-493 via Register Communication

The examples outline value setting for channel 1 via control and status bytes C0/S0 for addressing; the examples also show setting via data bytes D0 and D1 for the transmission of values.

The process for setting channels 1 and 2 are similar via control and status bytes C1/S1, as well as data bytes D2 and D3 for channel 3 via control and status bytes C2/S2 and data bytes D4 and D5.

2.1.1.12.4.1 Register read out

Example: Check scaling factor for energy measurement

Read register 35 in order to check the scaling factor. To do so, write:

- value 0x00 into the output data bytes D0 and D1 and
- value 0xA3 = ‘1010.0011’ into the control byte C0.

The bits 0 ... 5 of the control byte correspond to the register address (‘10.0011’ = 35). Bit 6 = 0 enables the write access and bit 7 = 1 starts the register communication.

Control byte C0			Output data byte D1	Output data byte D0
1	0	‘10.0011’ (35)	0x00 (0)	0x00 (0)

Status byte S0			Input data byte D1	Input data byte D0
1	0	‘10.0011’ (35)	0x00 (0)	0x04 (4)

After a successful read access, input data byte D0 contains the low byte 0x00 and input data byte D1 contains the high byte 0x04 of the scaling factor 0x0004. The corresponding bits of the control byte are mirrored in bits 0 ... 5 and bit 7 of the status byte.

The value in this example is 0x0004 and corresponds to a scaling factor of 0.01 kWh (factory setting).

2.1.1.12.4.2 Writing a Register without Password Protection

Example: Delete all min/max values

In order to delete all min/max values, write command 0x1020 into the command register (register 7). To do so, write:

- the low byte 0x20 of the command into the output data byte D0,
- the high byte 0x10 of the command into the output data byte D1 and
- the value 0xC7 = ‘1100.0111’ into the control byte C0.

The bits 0 ... 5 of the control byte correspond to the register address (‘00.0111’ = 7). Bit 6 = 1 enables the write access and bit 7 = 1 starts the register communication.

Control byte C0			Output data byte D1	Output data byte D0
1	1	‘00.0111’ (7)	0x10 (16)	0x20 (32)

Status byte S0			Input data byte D1	Input data byte D0
1	0	‘00.0111’ (7)	0xXX	0xXX

After a successful write access, the corresponding bits of the control byte are mirrored in bits 0 ... 5 and bit 7 of the status byte. The input data bytes D0 and D1 have no significance.

2.1.1.12.4.3 Writing a Register with Password Protection

Example: Storing the power consumption ahead of time

The module stores energy consumption in the RAM and saves the values every 15 minutes to the EEPROM.
If switching off the module without losing the energy consumption measured since the last cyclic storage is desired, manually store the present value to the EEPROM using this command.
A password is necessary in order to store the power consumption ahead of time.

Step 1: Write password

Note
A password must only be entered once for channel 1. The write permission for channel 2 and channel 3 are also granted.

Write password 0x1235 into the password register (register 31) to allow write access to the user registers. To do so, write:

- the low byte 0x35 of the password into the output data byte D0,
- the high byte 0x12 of the password into the output data byte D1 and
- the value 0xDF = ‘1101.1111’ into the control byte C0.

The bits 0 ... 5 of the control byte correspond to the register address (‘01.1111’ = 31). Bit 6 = 1 enables the write access and bit 7 = 1 starts the register communication.

Control byte C0			Output data byte D1	Output data byte D0
1	1	‘01.1111’ (31)	0x12 (18)	0x35 (53)

Status byte S0			Input data byte D1	Input data byte D0
1	0	‘01.1111’ (31)	0xXX	0xXX

After a successful write access, the corresponding bits of the control byte are mirrored in bits 0 ... 5 and bit 7 of the status byte. The input data bytes D0 and D1 have no significance.

In order to check the password, read register 31 (cf. section 2.1.1.12.4.1,Register read out”).

Step 2: Storing the power consumption ahead of time

Write command 0x1014 into the command register (register 7) in order to save the power consumption ahead of time (cf. step 1).

Control byte C0			Output data byte D1	Output data byte D0
1	1	‘00.0111’ (7)	0x10 (16)	0x14 (20)

Status byte S0			Input data byte D1	Input data byte D0
1	0	‘00.0111’ (7)	0xXX	0xXX

Attention
Power consumption is stored in the EEPROM.
The EEPROM manufacturer indicates that at least 100,000 - and typically 1 million - write operations are possible with the module. Based on these numbers, and estimating that the power consumption is written to the EEPROM every 15 minutes in continuous operation, the power consumption memory has:
- a minimum life cycle of 2.85 years,
- a typical life cycle of 28.5 years.

Step 3: Reset password

Attention
Unlike password setting, the password must be erased for every individual channel in order to remove write permission for all channels.

Write value 0x0000 into register 31 in order to disable write permission to the user registers (cf. step 1).

Control byte C0			Output data byte D1	Output data byte D0
1	1	‘01.1111’ (31)	0x00 (0)	0x00 (0)

Status byte S0			Input data byte D1	Input data byte D0
1	0	‘01.1111’ (31)	0xXX	0xXX

Example: Delete the stored power consumption value

If starting a new power consumption measurement, delete the current power consumption value.
In order to delete the stored power consumption, a password must be entered.

Step 1: Write password

Note
A password must only be entered once for channel 1. The write permission for channel 2 and channel 3 are also granted.

Write password 0x1235 into the password register (register 31) to allow write access to the user registers.

Control byte C0			Output data byte D1	Output data byte D0
1	1	‘01.1111’ (31)	0x12	0x35

Status byte S0			Input data byte D1	Input data byte D0
1	0	‘01.1111’ (31)	0xXX	0xXX

Step 2: Delete the stored power consumption value

Write command 0x1004 into the command register (register 7) in order to delete the stored power consumption value and the overflow register for the power consumption (cf. step 1).

Control byte C0			Output data byte D1	Output data byte D0
1	1	‘00.0111’ (7)	0x10	0x04

Status byte S0			Input data byte D1	Input data byte D0
1	0	‘00.0111’ (7)	0x00	0x00

Step 3: Reset password

Attention
Unlike password setting, the password must be erased for every individual channel in order to remove write permission for all channels.

Write value 0x0000 into register 31 in order to disable write permission to the user registers (cf. step 1).

Control byte C0			Output data byte D1	Output data byte D0
1	1	‘01.1111’ (31)	0x00	0x00

Status byte S0			Input data byte D1	Input data byte D0
1	0	‘01.1111’ (31)	0xXX	0xXX

2.1.1.12.4.4 Application Example: Configuration of Power Consumption Measurement

Example: Power consumption measurement via current transformer with a transformer ratio of 1:25 and a measuring range of 1 kWh per unit (750-493) or 5 kWh per unit (750-493/000-001).

In order to configure the power consumption measurement, complete the following settings for each channel:

- Scaling factor for power consumption measurement
  (register 35)
- Divisor of the transformer ratio
  (register 37)
- Enable user scaling for transformer ratio
  (register 32, bit 0)
- Invert power consumption measurement, if necessary
  (register 32, bit 6)
- Start power consumption measurement
  (control byte 0 … 2, bit 0 … 3)

A password is necessary in order to write the registers described above.

Step 1: Write password

Note:
A password must only be entered once for channel 1.
The write permission for channel 2 and channel 3 are also granted.

Write value 0x1235 into register 31 to allow write access to the user registers. To do so, write:

- the low byte 0x35 of the password into the output data byte D0,
- the high byte 0x12 of the password into the output data byte D1 and
- the value 0xDF = ‘1101.1111’ into the control byte C0.

The bits 0 ... 5 of the control byte correspond to the register address (’01.1111’ = 31). Bit 6 = 1 enables the write access and bit 7 = 1 starts the register communication.

Control byte C0			Output data byte D1	Output data byte D0
1	1	‘01.1111’ (31)	0x12 (18)	0x35 (53)

Status byte S0			Input data byte D1	Input data byte D0
1	0	‘01.1111’ (31)	0xXX	0xXX

After successful write access, the corresponding bits of the control byte are mirrored in bits 0 ... 5 and 7 of the status byte. The input data bytes D0 and D1 have no significance.

In order to check the password, read register 31 (cf. section 2.1.1.12.4.1, „Register read out“).

Step 2: Setting the scaling factor for power consumption measurement

Write value 0x0005 into register 35 in order to set the scaling factor for the power consumption measurement to 1 kWh or 5 kWh per unit (cf. step 1).

Control byte C0			Output data byte D1	Output data byte D0
1	1	‘10.0011’ (35)	0x00 (0)	0x05 (5)

Status byte S0			Input data byte D1	Input data byte D0
1	0	‘10.0011’ (31)	0xXX	0xXX

Step 3: Setting the divisor of the transformer ratio

Write value 0x0019 into the register 37 in order to set the divisor of the transformer ratio to 25 (cf. step 1).

Control byte C0			Output data byte D1	Output data byte D0
1	1	‘10.0101’ (37)	0x00 (0)	0x19 (25)

Status byte S0			Input data byte D1	Input data byte D0
1	0	‘10.0101’ (37)	0xXX	0xXX

Step 4: Enable user scaling for transformer ratio

Read register 32 in order to verify that the user scaling for the transformer ratio has already been enabled (cf. section 2.1.1.12.4.1, „Register read out“).

Control byte C0:			Output data byte D1:	Output data byte D0:
1	0	‘10.0000’ (32)	0x00 (0)	0x00 (0)

Status byte S0:			Input data byte D1:	Input data byte D0:
1	0	‘10.0000’ (32)	0x00 (0)	‘hgfe.dcba’

After successful read access, input data byte D0 contains the low byte and input data byte D1 contains the high byte of the current operating mode. The corresponding bits of the control byte are mirrored in bits 0 ... 5 and 7 of the status byte.

If a (bit 0 in input data byte D0) = ‘1’, then the user scaling is already enabled. If a = ‘0’, the user scaling is disabled.
Write value 0x00 of input data byte D1 into output data byte D1 and the value ‘hgfe.dcb**1**’ into output data byte D0; bits 1 ... 7 have the values of the corresponding bits of the input data byte D0 and bit 0 is set to ‘1’.

Control byte C0			Output data byte D1	Output data byte D0
1	1	‘10.0000’ (32)	0x00 (0)	‘hgfe.dcb**1**’

Status byte S0			Input data byte D1	Input data byte D0
1	0	‘10.0000’ (32)	0xXX	0xXX

Step 5: Invert power consumption measurement (optional)

Read register 32 in order to verify that the power consumption measurement is inverted (cf. section 2.1.1.12.4.1, „Register read out“).

Control byte C0			Output data byte D1	Output data byte D0
1	0	‘10.0000’ (32)	0x00 (0)	0x00 (0)

Status byte S0			Input data byte D1	Input data byte D0
1	0	‘10.0000’ (32)	0x00 (0)	‘hgfe.dcba’

If g (bit 6 in input data byte D0) = ‘1’, then the power consumption measurement is inverted.
If g = ‘0’, the power consumption measurement is not inverted.
If inverting the power consumption measurement is needed, write value 0x00 of input data byte D1 into output data byte D1 and value ‘h**1**fe.dcba’ into output data byte D0, the bits 0 ... 5 and 7 having the values of the corresponding bits of input data byte D0 and bit 6 being set to ‘1’.

Control byte C0			Output data byte D1	Output data byte D0
1	1	‘10.0000’ (32)	0x00 (0)	‘h**1**fe.dcba’

Status byte S0			Input data byte D1	Input data byte D0
1	0	‘10.0000’ (32)	0xXX	0xXX

Step 6: Resetting password

Note:
Unlike password setting, the password must be erased for every individual channel in order to remove write permission for all channels.

Write value 0x0000 into register 31 in order to disable write permission to the user registers (cf. step 1).

Control byte C0			Output data byte D1	Output data byte D0
1	1	‘01.1111’ (31)	0x00	0x00

Status byte S0:			Input data byte D1:	Input data byte D0:
1	0	‘01.1111’ (31)	0xXX	0xXX

Step 7: Setting operating mode

Write value 0x0004 into control byte C0 in order to enable the power consumption measurement.

Control byte C0				Output data byte D1	Output data byte D0
0	0	0	4	0x00	0x00

Status byte S0				Input data byte D1	Input data byte D0
0	X	0	4	0xXX	0xXX

WAGO Kontakttechnik GmbH & Co. KG
Postfach 2880 • D-32385 Minden
Hansastraße 27 • D-32423 Minden
Phone: 05 71/8 87 – 0
Fax: 05 71/8 87 – 1 69
E-Mail: info@wago.com

Internet: http://www.wago.com